HELI

CPD 20/25/30/35

GB2LI-H / GB2LI-M / GB3LI-S / GB3LI-M

LI ION **2-3.5 t**

G2 Series Lithium-ion Battery
Forklift Truck

TECHLIFT
Toujours plus haut !

Powerful Performance, High Efficiency

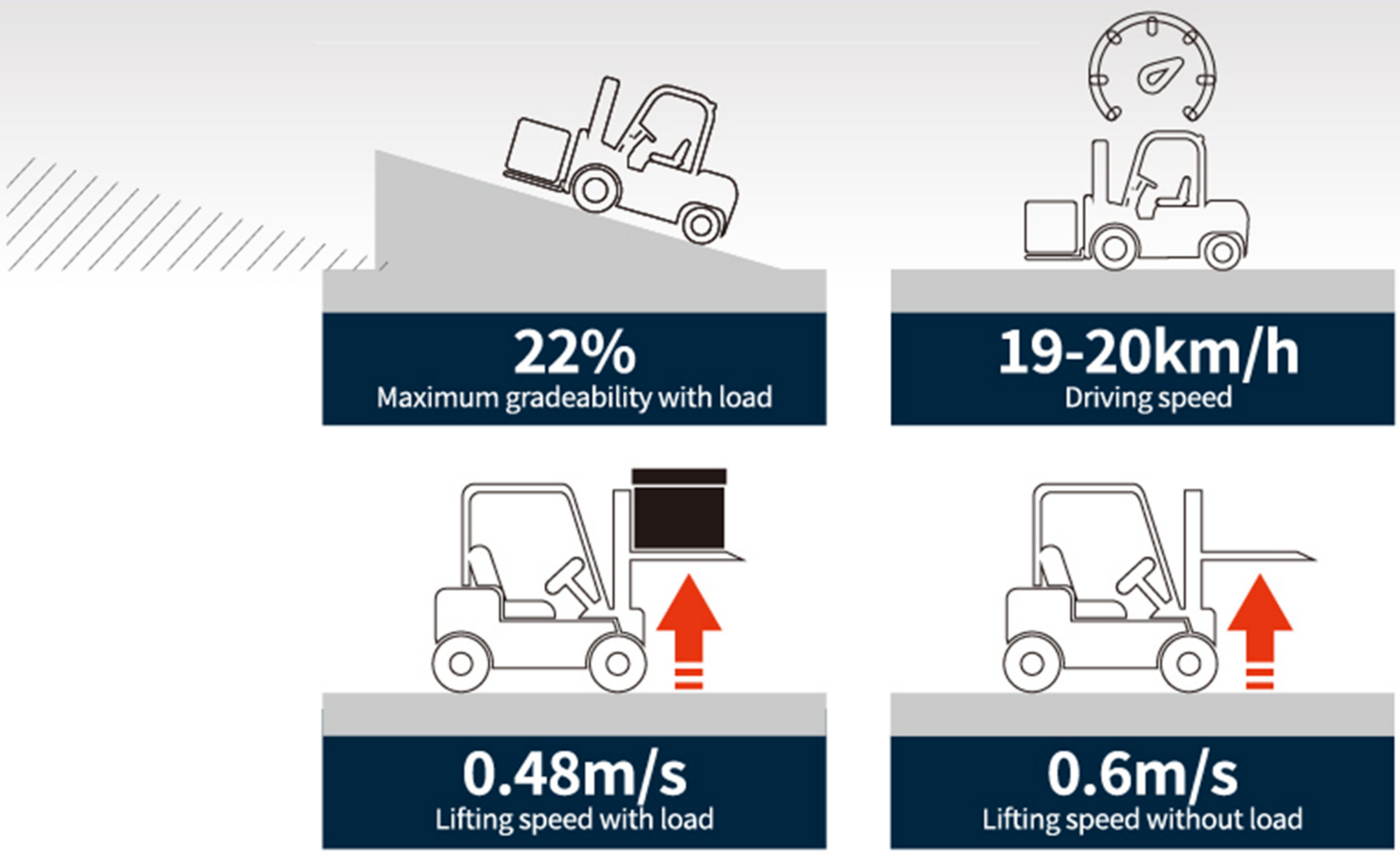

Note: the data displayed are all based on the model CPD30-GB2Li-H, and data for other trucks are shown in the table of technical parameters.

Smart and Safe, Ease In All Aspects

- Steering deceleration: Auto steering deceleration reduces the risk of turning over;
- Steering started by steering wheel: the steering wheel can directly start the steering function and provides the required oil quantity according to the steering wheel speed;
- Color screen instrument: Bilingual (CN/EN) options, full vehicle information at a glance;
- PES Three-speed mode: Choose multiple speed modes according to working conditions, guarantee work efficiency;
- Rear handle with horn switch for safer reversing;
- Lithium battery is automatically heated at low temperature, with excellent low temperature adaptability.

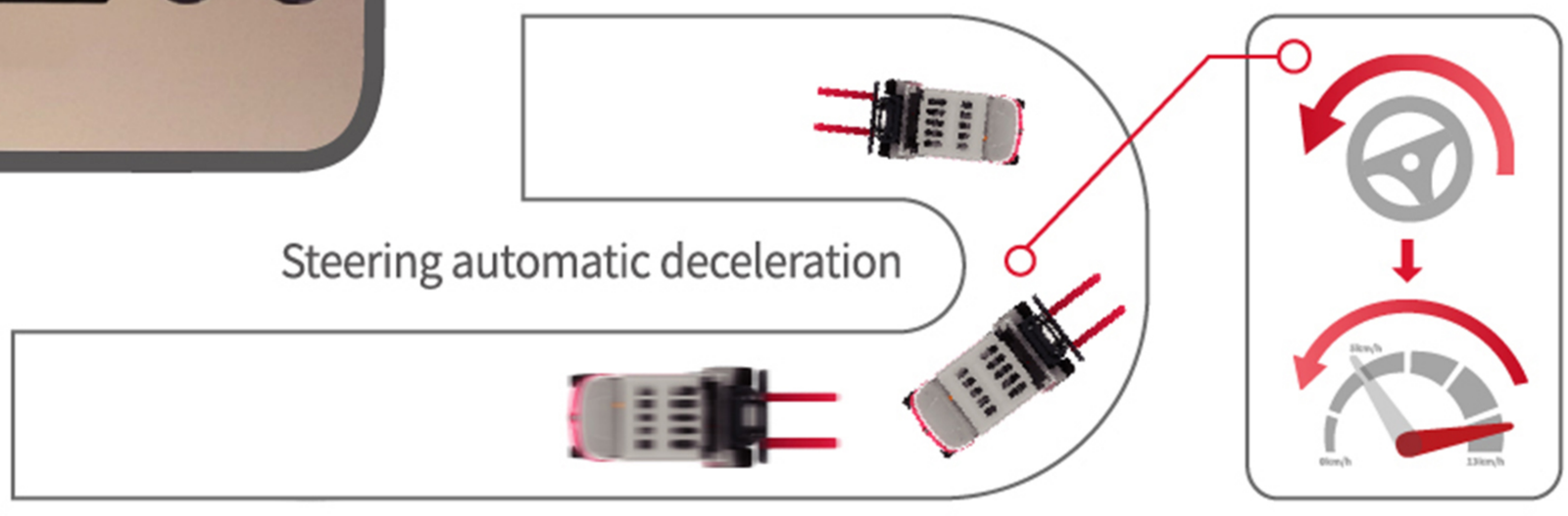

Optimized Ergonomic Design, Better Driving Comfort

Customers can freely choose from the 3 different configurations: S, M, H. Especially M and H configurations are comparable with internal combustion trucks in terms of comprehensive performance.

Large boarding space and foot operation space for more comfortable operation

New type of ratchet hand brake reduces operating force by 17%.

Brake fluid within reach, easy to check and refill

- Optimized mast and pressed overhead guard for improved visibility and safety.
- Ultra-low torque steering gear and lighter steering operation reduces driving fatigue.

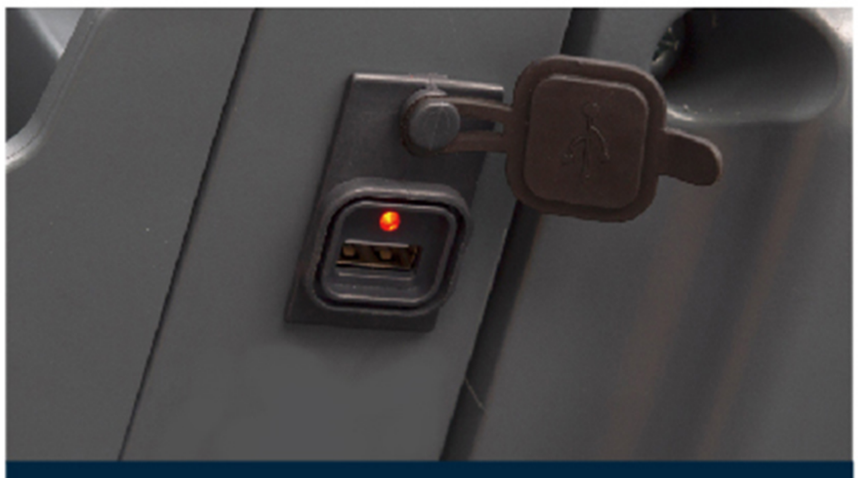

USB power supply design is more thoughtful

IC truck type control valve stem, better fit to the driver's habits

High Quality & High Reliability

The integrated cast drive axle and reinforced cast steering axle have been proven in the market and are mature and reliable. The mast force optimization design improves the overall performance and effectively ensures the operation safety.

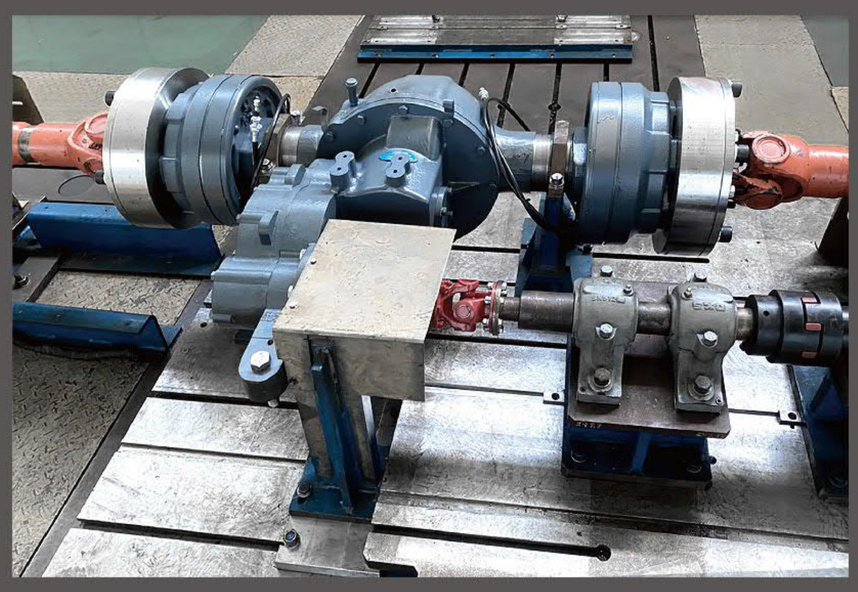

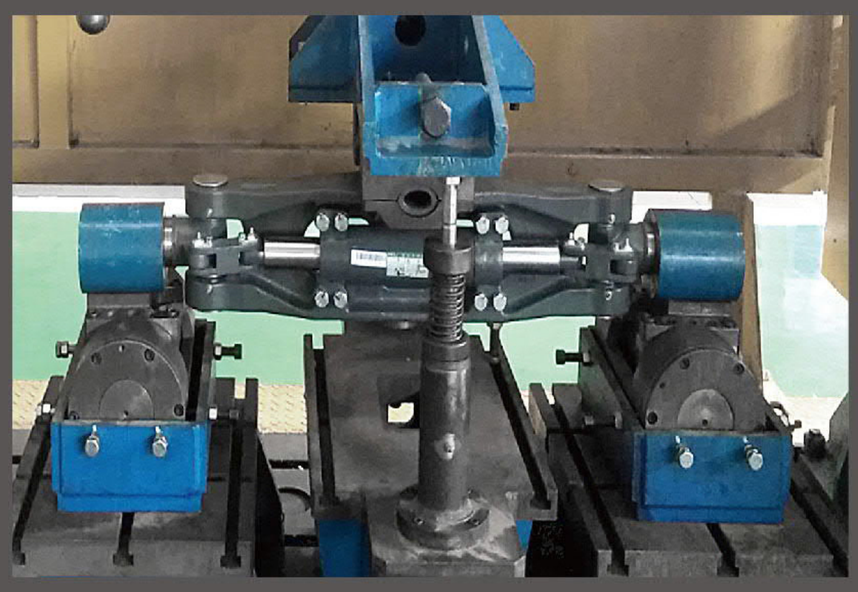

Centralized Checkpoints, Easy Maintenance

The electrical design is concentrated on the top of lithium battery, and the maintenance points are centralized, which is convenient for inspection and maintenance.

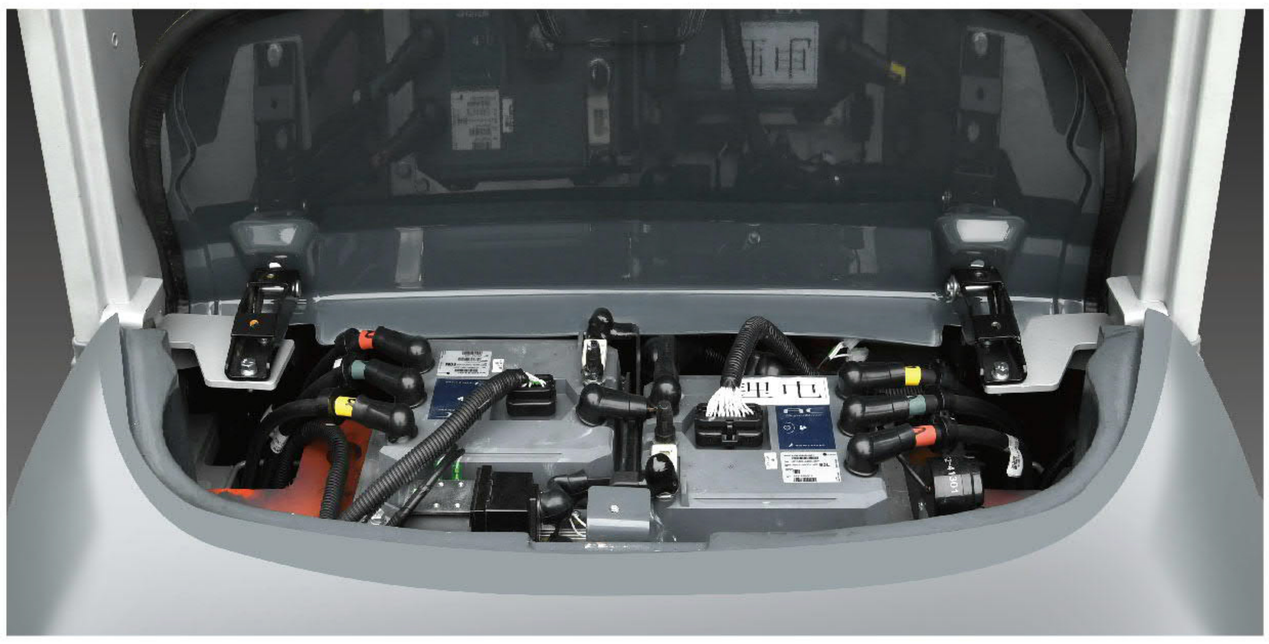

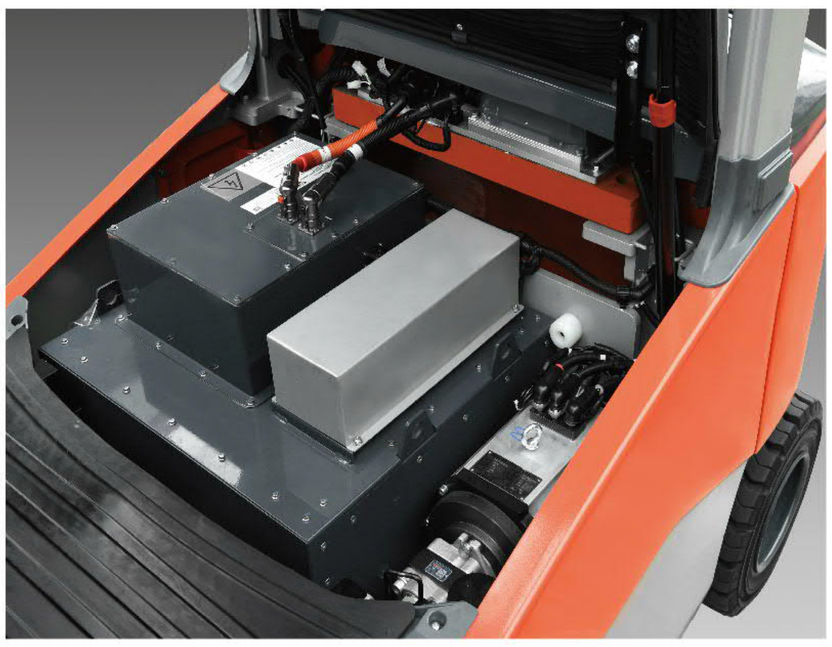

Tested in Rough Operating Environment

IPX4 waterproof: the vehicle is powered on to simulate a 15min short-time 5000L rainstorm test, and the vehicle can continue to run without failures.

After 10mins wading test, the vehicle has no failure. (Water depth 200mm)

The whole vehicle can be operated alternately in -20°C cold storage for 6 hours and parked in the cold storage for 12 hours without any failure and can continue to work.

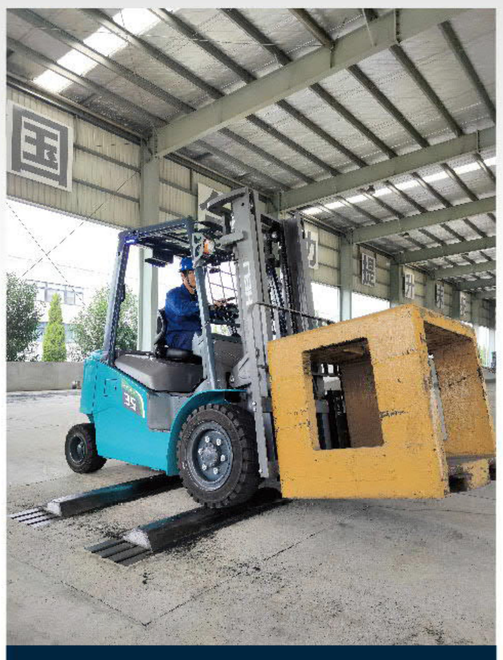
The truck passed simulation experiment of bumpy road.

Lithium Battery Advantages

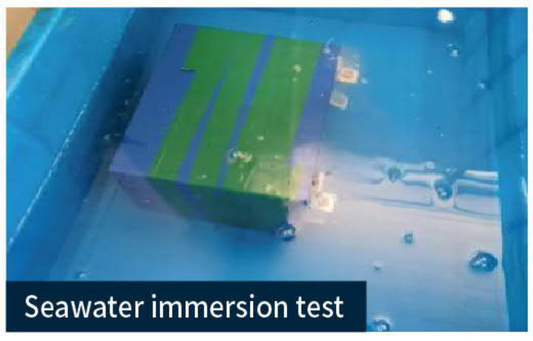
Seawater immersion test

Extrusion test

Heating test

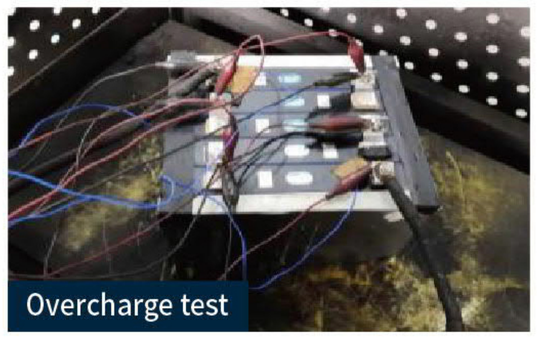
Overcharge test

Temperature cycling test

Temperature cycling test

Drop test

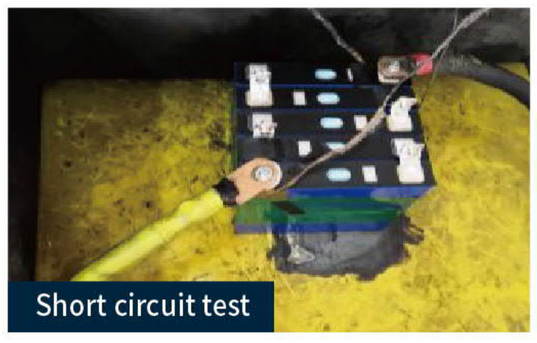
Short circuit test

- The truck selects mature and economical square iron phosphate lithium battery core and module used by large numbers of commercial vehicles;
- The module adopts aluminum alloy plate frame, which is firm, light in weight and has good heat dissipation effect;
- Fast charging: fast charging makes truck gapless operation possible, and it can be filled in 2 hours;
- High efficiency and safety: The charging and discharging efficiency is up to 98%, and temperature of thermal runaway is over 600 °C;
- Low temperature adaptability: Standard configuration of heating function ensures normal operation of low temperature environment;
- Long service life: The normal charging and discharging cycles reaches to 4000, and capacity retention rate is more than 78%;
- Maintenance free: the battery does not need manual maintenance and does not need to add distilled water electrolyte;
- Green and clean: no pollution and zero emission.

Manufacturer and Technical Data

	Characteristics								
1.01	Manufacturer			HELI					
1.02	Model			CPD20	CPD25	CPD20	CPD25	CPD20	CPD25
1.03	Configuration number			GB2LI-H	GB2LI-H	GB2LI-M/GB3LI-M	GB2LI-M/GB3LI-M	GB3LI-S	GB3LI-S
1.04	Rated capacity	Q	kg	2000	2500	2000	2500	2000	2500
1.05	Load center distance	c	mm	500					
	Weight								
2.01	Total weight (with/without battery)		kg	3510/3290	3890/3670	3510/3290	3890/3670	3510/3290	3890/3670
	Tyres								
3.01	Tyre type			pneumatic tyre	pneumatic tyre	pneumatic tyre	pneumatic tyre	pneumatic tyre	pneumatic tyre
3.02	Tyre size,front			7.00-12-14PR					
3.03	Tyre size,rear			18×7-8-14PR					
	Dimensions								
4.01	Height (mast lowered)	h1	mm	2000	2000	2000	2000	2000	2000
4.02	Max. height,extended (with backrest)	h4	mm	4030					
4.03	Overall length (with fork)	l1	mm	3352	3502	3352	3502	3352	3502
4.04	Overall length (without fork)	l2	mm	2432	2432	2432	2432	2432	2432
4.05	Overall width	b1	mm	1160					
4.06	Min. outside turning radius	Wa	mm	2050					
	Performance Data								
5.01	Travel speed (laden/unladen)		km/h	19/20		18/19		14/15	
5.02	Lift speed (laden/unladen)		m/s	0.49/0.6	0.47/0.6	0.46/0.56	0.44/0.56	0.38/0.49	0.35/0.49
5.03	Max.gradeability (laden/unladen)		%	25/28	24/28	22/28	20/28	18/25	16/25
	Battery								
6.01	Battery voltage/Capacity		V/Ah	80/271	80/271	80/271	80/271	80/202	80/202
6.02	Battery weight		kg	220	220	220	220	220	220
	Motor and controller								
7.01	Driving motor powering (S2-60min)		kW	16.6		16.6		15	
7.02	Lifting motor powering (S3-15%)		kW	26		25.5		21	

Manufacturer and Technical Data

	Characteristics								
1.01	Manufacturer			HELI					
1.02	Model			CPD30	CPD35	CPD30	CPD35	CPD30	CPD35
1.03	Configuration number			GB2LI-H	GB2LI-H	GB2LI-M/GB3LI-M	GB2LI-M/GB3LI-M	GB3LI-S	GB3LI-S
1.04	Rated capacity	Q	kg	3000	3500	3000	3500	3000	3500
1.05	Load center distance	c	mm	500					
	Weight								
2.01	Total weight (with/without battery)		kg	4580/4230	5000/4650	4580/4230	5000/4650	4580/4230	5000/4650
	Tyres								
3.01	Tyre type			pneumatic tyre/solid	solid tyre	pneumatic tyre/solid	solid tyre	pneumatic tyre/solid	solid tyre
3.02	Tyre size,front			8×9-15-14PR	28×9-15	28×9-15-14PR	28×9-15	28×9-15-14PR	28×9-15
3.03	Tyre size,rear			200/50-10					
	Dimensions								
4.01	Height (mast lowered)	h1	mm	2070	2120	2070	2120	2070	2120
4.02	Max. height,extended (with backrest)	h4	mm	4217					
4.03	Overall length (with fork)	l1	mm	3639	3644	3639	3644	3639	3644
4.04	Overall length (without fork)	l2	mm	2569	2574	2569	2574	2569	2574
4.05	Overall width	b1	mm	1225					
4.06	Min. outside turning radius	Wa	mm	2215					
	Performance Data								
5.01	Travel speed (laden/unladen)		km/h	19/20		18/19		14/15	
5.02	Lift speed (laden/unladen)		m/s	0.48/0.6	0.44/0.54	0.41/0.54	0.39/0.54	0.37/0.49	0.34/0.45
5.03	Max.gradeability (laden/unladen)		%	22/28	20/28	20/28	18/28	16/25	15/25
	Battery								
6.01	Battery voltage/Capacity		V/Ah	80/404	80/404	80/404	80/404	80/272	80/272
6.02	Battery weight		kg	350	350	350	350	350	350
	Motor and controller								
7.01	Driving motor powering (S2-60min)		kW	17		16.6		15	
7.02	Lifting motor powering (S3-15%)		kW	26		25.5		21	

Note : for configuration number, 2：ZAPI controller；3：Inmotion controller.

CPD 20/25/30/35

GB2LI-H / GB2LI-M / GB3LI-S / GB3LI-M

Ast: Right angle stacking aisle width
a: Clearance
l : Load Length

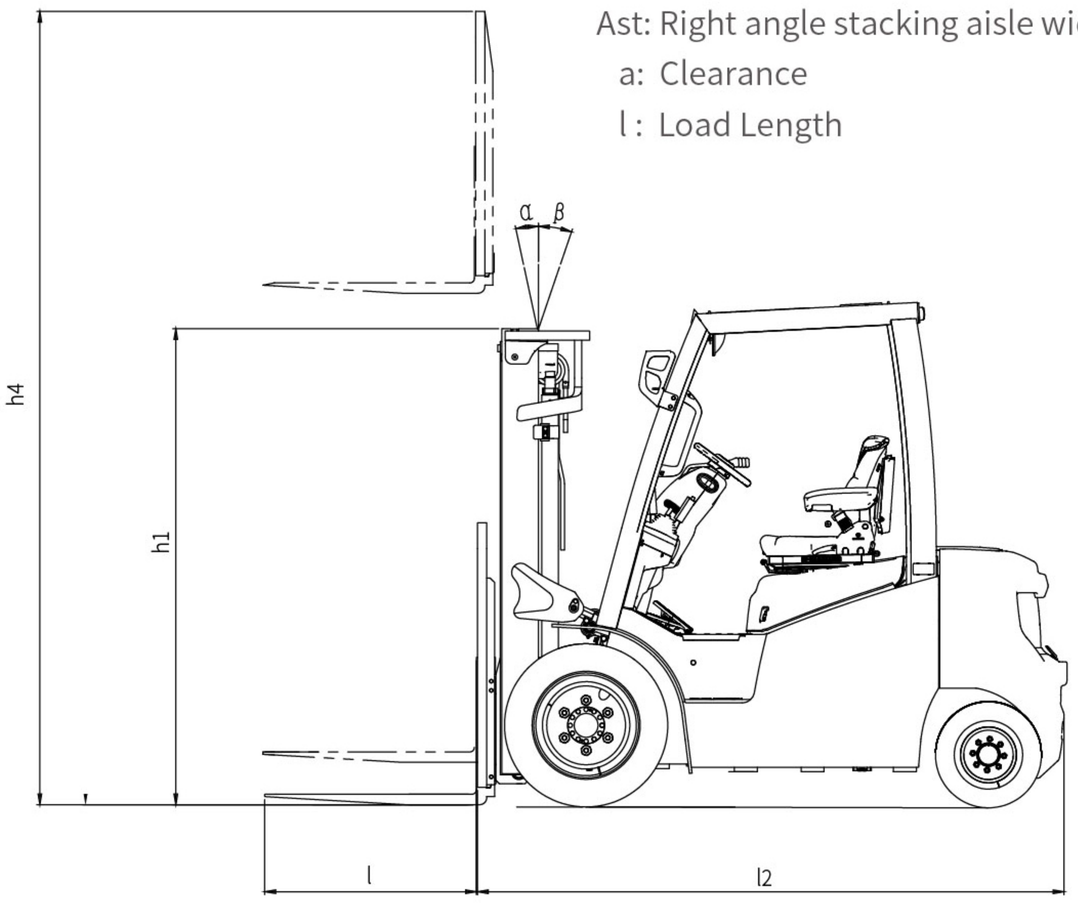

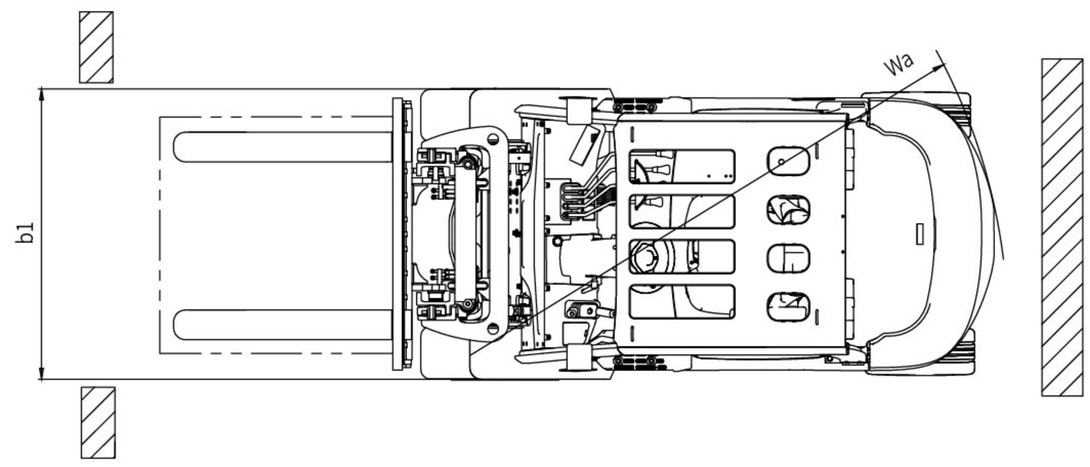

Load curve

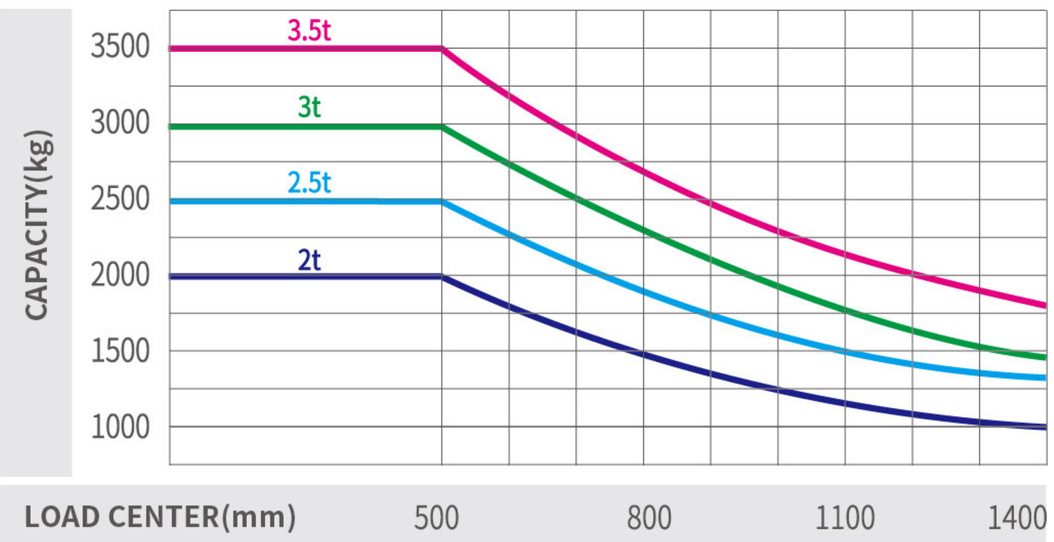

Note: The vertical axis stands for load capacity and the horizontal axis stands for load center which is calculated from the front surface of the forks to the gravity of the standard load. the standard load means a cubic with 1000mm edge length. When mast is tilted forward, using non-standard forks or loading large goods, the load capacity will be reduced. The load capacity of standard mast at different load center can be known from this load chart.

Lithium battery

Lithium battery brand	Pengcheng（CATL module/Core）				Heli(LISHEN module/Core)			
Voltage/Capacity	80V/202Ah	80V/271Ah	80V/404Ah	80V/542Ah	80V/202Ah	80V/272Ah	80V/404Ah	80V/544Ah
2-2.5t S model	○	○	○	—	●	○	○	—
2-2.5t M model	—	●	○	—	—	○	○	—
2-2.5t H model	—	●	○	—	—	○	○	—
3-3.5t S model	—	○	○	○	—	●	○	○
3-3.5t M model	—	—	●	○	—	—	○	○
3-3.5t H model	—	—	●	○	—	—	○	○
Lithium battery heating in low temperature	●							

NOTE:“●”standard ;“○”optional ;“—” not applicable

Color Options (the color of truck body can be customized)

Model	H	M	S
Standard Configuration			

Wide View Standard Mast

Mast model	Max.lifting height (mm)	Load capacity (lode center 500mm)(kg)				Height (mast lowered) (mm)				Free lift (with backrest) (mm)				Service weight (kg)				Mast tilt angle α/β (°)
		2t	2.5t	3t	3.5t	2t	2.5t	3t	3.5t	2t	2.5t	3t	3.5t	2t	2.5t	3t	3.5t	
M200	2000	2000	2500	3000	3500	1500	1500	1570	1620	150	150	155	160	3420	3800	4484	4894	6-12
M250	2500	2000	2500	3000	3500	1750	1750	1820	1870	150	150	155	160	3465	3845	4532	4947	6-12
M300	3000	2000	2500	3000	3500	2000	2000	2070	2120	150	150	155	160	3510	3890	4580	5000	6-12
M330	3300	2000	2500	3000	3500	2150	2150	2220	2270	150	150	155	160	3537	3917	4609	5032	6-12
M350	3500	2000	2500	3000	3500	2250	2250	2320	2370	150	150	155	160	3555	3935	4628	5053	6-12
M370	3700	2000	2500	3000	3500	2350	2350	2420	2470	150	150	155	160	3573	3953	4647	5074	6\6
M400	4000	2000	2500	3000	3500	2550	2550	2620	2670	150	150	155	160	3650	4030	4727	5158	6\6
M425	4250	1950 *2000	2450 *2500	2850 *2900	3300 *3400	2675	2675	2745	2795	150	150	155	160	3673	4053	4751	5184	6\6 *6\12
M450	4500	1900 *1950	2300 *2400	2750 *2850	3150 *3350	2800	2800	2870	2920	150	150	155	160	3695	4075	4775	5211	6\6 *6\12
M500	5000	1800 *1850	1850 *2200	2400 *2600	2700 *2850	3050	3050	3120	3170	150	150	155	160	3740	4120	4823	5264	6\6 *6\6
M550	5500	1400 *1600	1550 *1950	1850 *2400	2200 *2650	3350	3350	3420	3470	150	150	155	160	3835	4215	4921	5368	3\6 *3\6
M600	6000	950 *1500	1050 *1800	1500 *2200	1650 *2400	3600	3600	3670	3720	150	150	155	160	3880	4260	4969	5421	3\6 *3\6

Note: (1) * refers to the rate capacity when the front wheel of the truck is dual tyre.
(2) When the front wheel of 2-3.5t is dual tyre, the weight is the data in the table plus 100kg;

Wide View Full Free 2-Stage Mast

Mast model	Max.lifting height (mm)	Load capacity (lode center 500mm)(kg)				Height (mast lowered) (mm)				Free lift (with backrest) (mm)				Service weight (kg)				Mast tilt angle α/β (°)
		2t	2.5t	3t	3.5t	2t	2.5t	3t	3.5t	2t	2.5t	3t	3.5t	2t	2.5t	3t	3.5t	
ZM200	2000	2000	2500	3000	3500	1500	1500	1570	1620	496	496	340	443	3432	3812	4505	4911	6-12
ZM250	2500	2000	2500	3000	3500	1750	1750	1820	1870	746	746	590	693	3480	3860	4555	4964	6-12
ZM300	3000	2000	2500	3000	3500	2000	2000	2070	2120	996	996	840	943	3527	3907	4605	5018	6-12
ZM330	3300	2000	2500	3000	3500	2150	2150	2220	2270	1146	1146	990	1093	3557	3937	4637	5051	6-12
ZM350	3500	2000	2500	3000	3500	2250	2250	2320	2370	1246	1246	1090	1193	3575	3955	4657	5072	6-12
ZM370	3700	2000	2500	3000	3500	2350	2350	2420	2470	1346	1346	1190	1293	3595	3975	4677	5093	6\6
ZM400	4000	2000	2500	3000	3500	2550	2550	2620	2670	1546	1546	1390	1493	3671	4051	4755	5173	6\6
ZM425	4250	1950 *2000	2450 *2500	2850 *2900	3300 *3400	2675	2675	2745	2795	1671	1671	1515	1618	3695	4075	4781	5200	6\6 *6\12
ZM450	4500	"1900 *1950	2300 *2400	2750 *2850	3150 *3350	2800	2800	2870	2920	1796	1796	1640	1743	3721	4101	4809	5229	6\6 *6\12
ZM500	5000	1800 *1850	1850 *2200	2400 *2600	2700 *2850	3050	3050	3120	3170	2046	2046	1890	1993	3772	4152	4863	5285	6\6 *6\6
ZM550	5500	1400 *1600	1550 *1950	1850 *2400	2200 *2650	3350	3350	3420	3470	2346	2346	2190	2293	3869	4249	4962	5388	3\6 *3\6
ZM600	6000	950 *1500	1050 *1800	1500 *2200	1650 *2400	3600	3600	3670	3720	2596	2596	2440	2543	3919	4299	5015	5444	3\6 *3\6

Note: (1) * refers to the rate capacity when the front wheel of the truck is dual tyre.
(2) When the front wheel of 2-3.5t is dual tyre, the weight is the data in the table plus 100kg;
(3) 2-2.5t: The free lifting height is increased by 356 mm when there is no backrest;
(4) 3T: The free lifting height is increased by 520mm when there is no backrest;
(5) 3.5t: The free lifting height is increased by 426 mm when there is no backrest;

Wide View Full Free 3-Stage Mast

Mast model	Max.lifting height (mm)	Load capacity (lode center 500mm)(kg)				Height (mast lowered) (mm)				Free lift (with backrest) (mm)				Service weight (kg)				Mast tilt angle α/β (°)
		2t	2.5t	3t	3.5t	2t	2.5t	3t	3.5t	2t	2.5t	3t	3.5t	2t	2.5t	3t	3.5t	
ZSM360	3600	2000	2500	3000	3500	1800	1800	1870	1870	796	796	640	690	3654	4034	4723	5109	6\6
ZSM400	4000	2000	2500	3000	3500	1950	1950	2020	2020	946	946	790	840	3695	4075	4764	5150	6\6
ZSM435	4350	1900 *2000	2400 *2500	2850 *2900	3200 *3350	2050	2050	2120	2120	1046	1046	890	940	3726	4106	4793	5179	6\6 *6\6
ZSM450	4500	1850 *1900	2300 *2350	2700 *2850	3050 *3200	2100	2100	2170	2170	1096	1096	940	990	3739	4119	4808	5194	6\6 *6\6
ZSM470	4700	1800 *1850	2200 *2250	2650 *2800	2900 *2950	2165	2165	2230	2230	1161	1161	1000	1050	3758	4138	4826	5212	6\6 *6\6
ZSM480	4800	1800 *1850	2200 *2250	2600 *2750	2900 *2950	2210	2210	2270	2270	1206	1206	1040	1090	3771	4151	4836	5222	6\6 *6\6
ZSM500	5000	1700 *1800	2100 *2200	2450 *2750	2750 *2900	2300	2300	2370	2370	1296	1296	1140	1190	3794	4174	4863	5249	6\6 *6\6
ZSM540	5400	1450 *1700	1500 *2150	2250 *2650	2350 *2700	2400	2400	2470	2470	1396	1396	1240	1290	3826	4206	4893	5279	3\6 *3\6
ZSM600	6000	1000 *1600	1100 *1800	1400 *2200	1650 *2400	2600	2600	2670	2670	1596	1596	1440	1490	3929	4309	4997	5383	3\6 *3\6
ZSM650	6500	*1450	*1650	*2000	*2200	2800	2800	2870	2870	1796	1796	1640	1690	3985	4365	5052	5438	*3\6
ZSM700	7000	*1150	*1300	*1800	*2000	2975	2975	3045	3045	1971	1971	1815	1865	4035	4415	5102	5488	*3\3
ZSM750	7500	*950	*1050	*1200	*1300	3150	3150	3370	3370	2146	2146	2140	2190	4091	4471	5157	5543	*3\3

Note: (1) * refers to the rate capacity when the front wheel of the truck is dual tyre.
(2) When the front wheel of 2-3.5t is dual tyre, the weight is the data in the table plus 100kg;
(3) 2-2.5t: The free lifting height is increased by 356 mm when there is no backrest;
(4) 3.5t: The free lifting height is increased by 426 mm when there is no backrest;

Operating Cost Comparison:
Lithium battery forklift **vs.** Lead-acid battery forklift **vs.** IC forklift
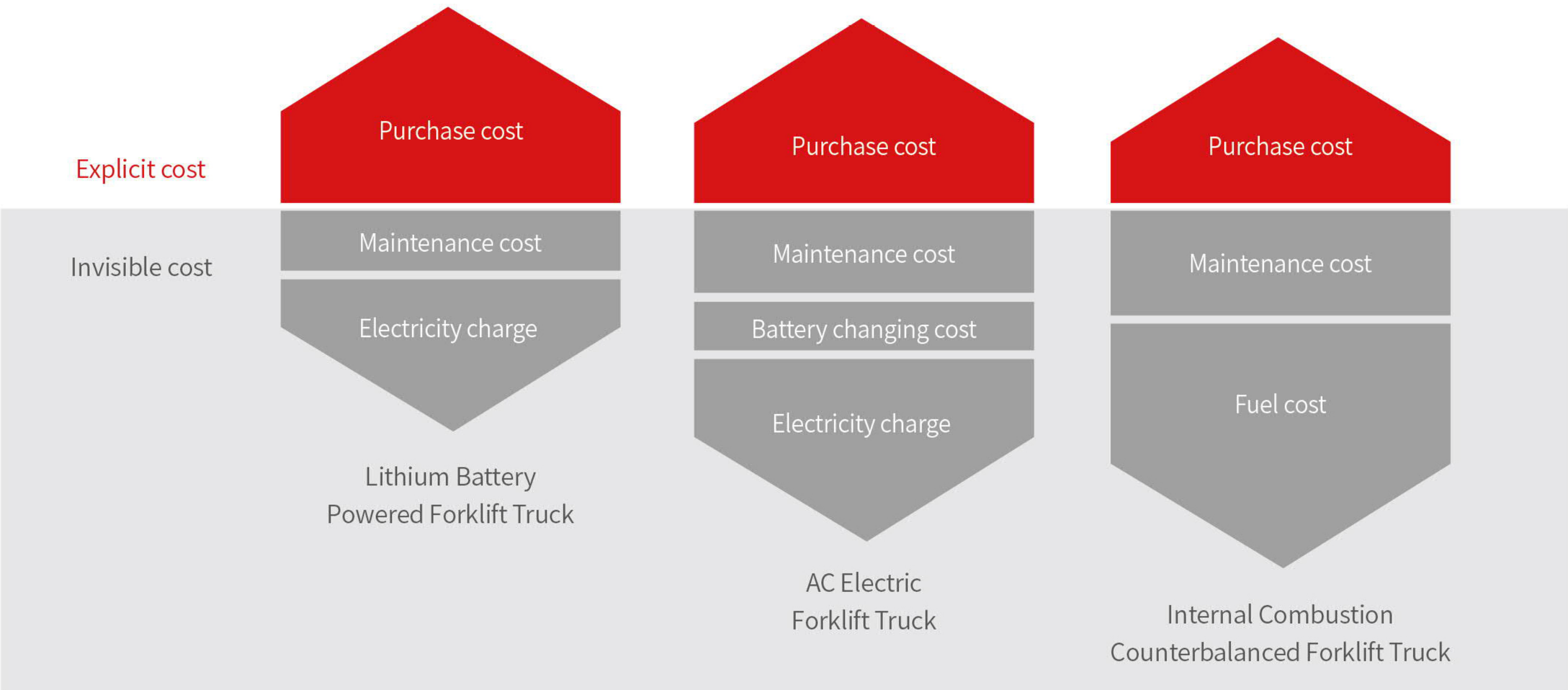
The advantages of HELI lithium battery forklift trucks are more prominent in the life cycle cost.
Compared with internal combustion forklift truck, lithium battery forklift truck has the advantages of no noise, no pollution, small vibration and simple operation.
Compared with the lead-acid battery forklift truck, lithium battery forklift has the characteristics of fast charging and charging at any time, which is more suitable for multi shift operation.
Besides, HELI lithium battery forklift is maintenance free, high power conversion efficiency, and economical overall operation cost.