Liandong Engineering Trucks Attachments

ATTACHMENT CALALOG 2022

LDSJ

www.aqldsj.com

A good helper for your machines!

Side shifter

1-1 LC-series Sideshifter 02

1-2 GC-series Sideshifter 03

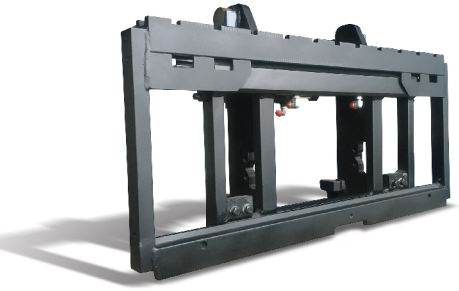

1-3 YC-series Sideshifter 04

Introduction:

Sideshifter is the most common attachments used on forklift trucks, allowing carriage moving in horizontal direction. LDSJ Sideshifters can greatly improve the flexibility and efficiency of forklift truck operation. It is suitable for various occasions using forklift truck for material handling and stacking.

LC-series
Sideshifter

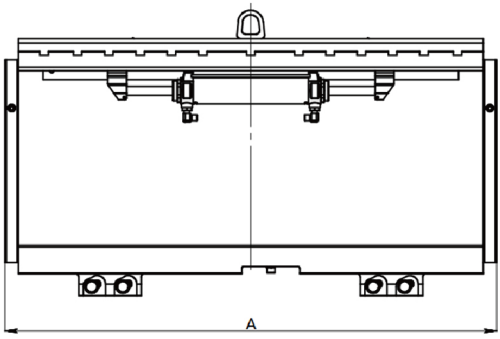

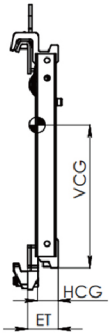

Capacity @ Load Center	Catalog Order NO.	Mounting Class	Total Side Shift	Carruage Width	Minimum Turck Carriage Width	Weight	Effective Thickness	Vertical Center of Gravity	Horizontal Center of Gravity	Available Forklift
Kg @ mm			(mm)	A(mm)	(mm)	(kg)	ET (mm)	VCG (mm)	HCG (mm)	(t)
1800@500	LC15	II	±100	970	900	55	63	230	28	1-1.8t
1800@500	LC15SL	II	±100	920	870	51	63	230	28	1-1.8t
1800@500	LC15LG	II	±100	1000	930	56	63	230	28	1-1.8t
2500@500	LC20	II	±100	1040	970	58	63	230	28	2-2.5t
2500@500	LC20SL	II	±100	1000	970	54	63	230	28	2-2.5t
2500@500	CY20GL-A24	II	±100	1020	970	55	63	230	28	2-2.5t
2500@500	CY20GL-A32	II	±100	1070	970	56	63	230	28	2-2.5t
2500@500	CY20GL-A33	II	±100	1200	1120	61	63	230	28	2-2.5t
3000@600	LC30	III	±100	1100	1000	74	68	300	29	3-3.5t
3000@600	CY30GL-B10	III	±100	1300	1120	82	68	300	29	3-3.5t
3000@600	CY30GL-B11	III	±100	1070	970	72	68	300	29	3-3.5t
3800@500	LC35	III	±100	1100	930	85	73	307	32	3.5-3.8t
3800@500	LC35E	III	±100	1200	1030	96	73	307	32	3.5-3.8t
3800@500	LC35A	III	±100	1500	1300	116	73	307	32	3.5-3.8t
4500@500	LC40B	III	±100	1350	1250	110	73	307	32	4.5t
4500@500	LC40	III	±100	1380	1250	114	73	307	32	4.5t
4500@500	LC40C	III	±100	1100	930	95	73	307	32	4.5t
4500@500	LC40RC	III	±100	1300	1130	107	73	307	32	4.5t

Notes:

1. The forklift truck needs to add 1 group of oil lines.
2. Please obtain the actual comprehensive bearing capacity of forklift/attachment from the forklift factory.
3. The total amount of sideshifting is 200 (±100) mm.
4. According to demand, special width of sideshifter can be provided.

Features:

1. Easy for installation, and high visiblility strcture.
2. Cylinder is detachable and easy for repair.
3. Throttle valves can adjust the speed of sideshifting.
4. Modified engineering plasitc wear-resistant materil for long service time.
5. Well-known brand seals ensure reliable quality.

GC-series
Sideshifter

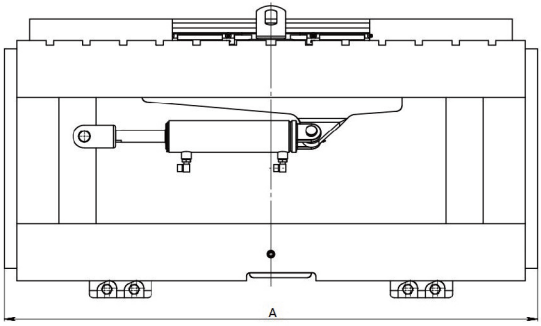

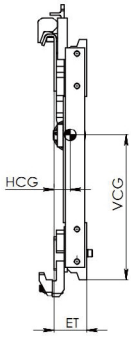

Capacity @ Load Center	Catalog Order NO.	Mounting Class	Total Side Shift	Overall Width	Minimum Turck Carriage Width	Weight	Effective Thickness	Vertical Center of Gravity	Horizontal Center of Gravity	Available Forklift
Kg @ mm			(mm)	A (mm)	(mm)	(kg)	ET (mm)	VCG (mm)	HCG (mm)	(t)
5000@610	GC50	IV	±100	1380	1200	250	84	380	43	5-7t
6800@610	GC70B	IV	±150	1532	1470	286	84	380	42	5-7t
6800@610	GC70FT	IV	±150	1700	1525	320	84	387	47	5-7t
6800@610	GC70	IV	±150	1845	1525	330	84	380	43	5-7t
6800@610	GC70K	IV	±150	2000	1580	358	84	387	47	5-7t
6800@610	GC70E	IV	±150	2200	1700	378	84	387	47	5-7t
6800@610	GC70A	IV	±150	2430	1735	406	84	387	47	5-7t

Notes:

1. The forklift truck needs to add 1 group of oil lines.
2. Please obtain the actual comprehensive bearing capacity of forklift/attachment from the forklift factory.
3. According to demand, special width of sideshifter can be provided.

Features:

1. Easy for installation, and high visiblility strcture.
2. Cylinder is detachable and easy for repair.
3. The speed of sideshifting can be reduced by cushioning device in the cylinder when reaching the end.
4. Lower hook is fixed with lock nuts to ensure safe.
5. Well-known brand seals ensure reliable quality.

YC-series
Sideshifter

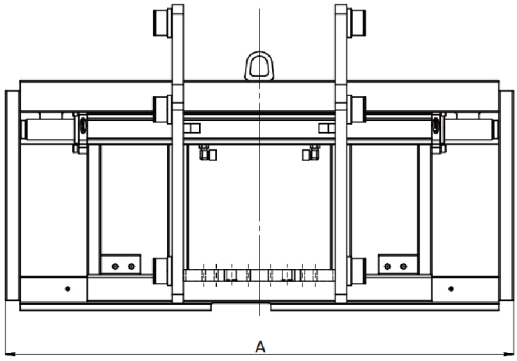

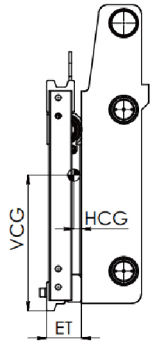

Capacity @ Load Center	Catalog Order NO.	Mounting Class	Total Side Shift	Carruage Width	Available Forklift
Kg @ mm			(mm)	A (mm)	(t)
1800@500	YC15	II	±100	970	1-1.8t
2500@500	YC20	II	±100	1040	2-2.5t
3000@500	YC30	III	±100	1100	3t
3500@500	YC35	III	±100	1100	3.5t

Notes:

1. The forklift truck needs to add 1 group of oil lines.
2. Not include the roller assembly.
3. The total amount of sideshifting is 200 (±100) mm.
4. Since the riser and roller shaft are associated with this sideshifter and different matching condition, please provide your forklift carriage drawing when ordering.

Features:

1. Plunger type cylinder is simple in sturcture and convenient for repair.
2. Upper and lower beams use high-strength plates.
3. Baffles on the frame can protect the cylinder.
4. The cylinder on the upper beam can improve the bearing capacity.
5. The buffered loops on the rod ends can reduce the impact and protect the goods.
6. Well-known brand seals ensure reliable quality.

Fork Positioner

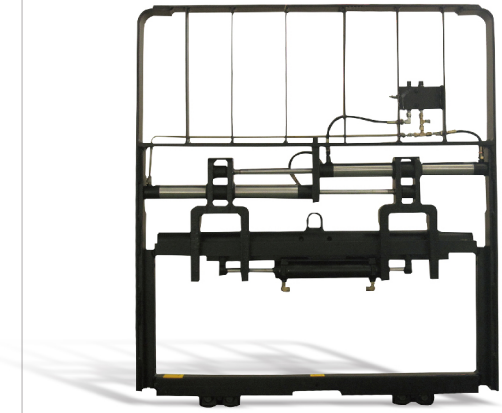

2-1 H-series Fork Positioner 07

2-2 K-series Fork Positioner 08

Introduction:

Fork positioners are widely used in logistic, warehouse and manufacturing industry. It can allow the drivers to adjust the forks quickly and accurately to fit different pallet sizes without leaving the seat. Fork positioner can also achieve the function of side shift.

H-series
Fork Positioner

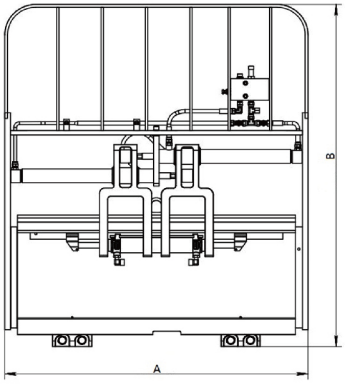

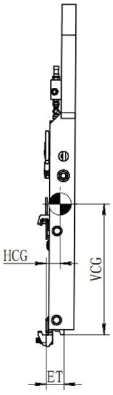

Capacity @ Load Center	Catalog Order No.	Mounting Class	Opening Range	Total Side Shift	Fork Pocket Width	Minimum Turck Carriage Width	Overall Width	Overall Height	Weight	Effective Thickness	Vertical Center of Gravity	Horizontal Center of Gravity	Available Forklift
Kg @ mm			(mm)	(mm)	(mm)	(mm)	A(mm)	B(mm)	(kg)	ET (mm)	VCG (mm)	HCG (mm)	(t)
1800@500	TC18G-A1	II	100-900		100	895	1018	1245	135	63	472	50	1-1.8t
2500@500	TC25G-A1	II	100-970		100	895	1088	1245	148	63	472	50	2-2.5t
2500@500	TC25G-A2	II	100-970		122	895	1088	1245	148	63	472	50	2-2.5t
3000@500	TC30G-B1	III	100-1125		125	930	1248	1336	186	68	501	50	3-3.5t
3000@500	TC30G-B2	III	100-1025		125	930	1148	1336	178	68	501	50	3-3.5t
3500@500	TC35G-B1	III	100-1025		150	930	1148	1336	181	68	501	50	3-3.5t
4500@500	TC45G-B1	III	100-1300		150	1080	1428	1343	256	73	533	50	4-4.5t
6800@600	TC70G-C1	IV	120-1750		150	1420	1905	1452	553	75	559	57	5-7t
1800@500	TY18G-A1	II	100-900	±100	100	895	1018	1245	139	62	472	50	1-1.8t
2500@500	TY25G-A3	II	100-1230	±100	100	1090	1348	1245	178	62	472	50	2-2.5t
2500@500	TY25G-A5	II	100-970	±100	122	940	1088	1245	152	62	472	50	2-2.5t
3000@500	TY30G-B1	III	100-1025	±100	125	970	1148	1336	182	68	501	50	3-3.5t
3000@500	TY30G-B2	III	100-1125	±100	125	1070	1248	1336	190	68	501	50	3-3.5t
3000@500	TY30G-B4	III	100-1440	±100	125	1400	1568	1336	215	68	501	50	3-3.5t
3500@500	TY35G-B1	III	100-1025	±100	150	970	1148	1336	185	68	501	50	3-3.5t
4500@500	TY45G-B1	III	100-1300	±100	150	1180	1428	1345	260	73	533	50	4-4.5t
4500@500	TY45G-B3	III	100-1620	±100	150	1400	1748	1345	280	73	533	56	4-4.5t
4500@500	TY45G-B4	III	100-1810	±100	150	1600	1968	1345	398	78	533	57	4-4.5t
5000@600	TY50G-C1	IV	120-1290	±100	150	1180	1440	1418	421	84	559	62	5t
6800@600	TY70G-C1	IV	120-1750	±150	150	1525	1905	1418	550	84	559	57	5-7t
6800@600	TY70G-C2	IV	115-1850	±150	150	1525	2000	1300	555	84	559	57	5-7t

Notes:

1. Opening range: the minimum means the inside distance between two forks while closing, and the maximum means the outside distance while opening.
2. Please obtain the actual comprehensive bearing capacity of forklift/attachment from the forklift factory.
3. Catalog Order No.: "TC" refers to Fork Positioner. "TY" refers to Sideshifting Fork Positioner.
4. Separate pitch adjustment at the end of the original product model of TC series plus "-01".
5. It is recommended that the length of the forks do not exceed 1520mm.
6. Forks position independently, without sideshift function, needs to add 2 groups of oil lines (without synchronous valves).
7. Forks position synchronously, with sideshift function, needs to add 2 groups of oil lines (with synchronous valves).
8. Forks position synchronously, without sideshift function, needs to add 1 group of oil lines (with synchronous valves).

Features:

1. Easy for installation, and high visiblility strcture.
2. Balance valves ensure two forks can move synchronously.
3. Forks are controlled by double oil cylinder with good stability.
4. Imported hydraulic products for the control valves.
5. Imported cone sealed high-pressure rubber hoses.

K-series
Fork Positioner

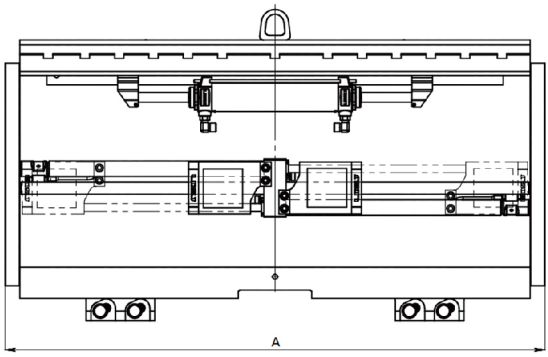

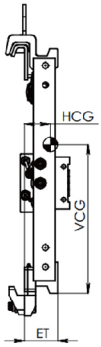

Capacity @ Load Center	Catalog Order NO.	Mounting Class	Opening Range	Total Side Shift	Fork Pocket Width	Minimum Turck Carriage Width	Overall Width	Weight	Effective Thickness	Vertical Center of Gravity	Horizontal Center of Gravity	Available Forklift
Kg @ mm			(mm)	(mm)	(mm)	(mm)	A(mm)	(kg)	ET (mm)	VCG (mm)	HCG (mm)	(t)
1800@500	TY18G-A2	II	28-860	±100	100	895	970	72	68	218	31	1-1.8t
2500@500	TY25G-A4	II	28-930	±100	100/122	940	1040	78	68	218	31	2-2.5t
3000@500	TY30G-B3	III	28-990	±100	125	970	1100	90	68	275	31	3-4.5t

Notes:

1. Opening range: the minimum means the inside distance between two forks while closing, and the maximum means the outside distance while opening.
2. Please obtain the actual comprehensive bearing capacity of forklift/attachment from the forklift factory.
3. The forklift truck needs to add 2 groups of oil lines.
4. The total amount of sideshifting is ±100 mm.
5. It is recommended that the length of the forks do not exceed 1520mm.
6. The models listed here only fit the basic portal frame. Please contact sales representatives for more information.

Features:

1. Integral type sideshift oil cylinder is simple in structure and easy for repair.
2. Positioning cylinder has throttle valve to adjust the speed.
3. Shift fork adopts fine steel castings, which is indestructible.
4. Light weight, easy for installation.
5. Distance between forks while closing is smaller.

Paper Roll Clamp

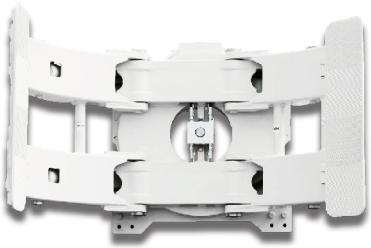

3-1 22H-series Paper Roll Clamp 11
3-2 25H-series Paper Roll Clamp 12
3-3 27H-series Paper Roll Clamp 13
3-4 33H-series Paper Roll Clamp 14

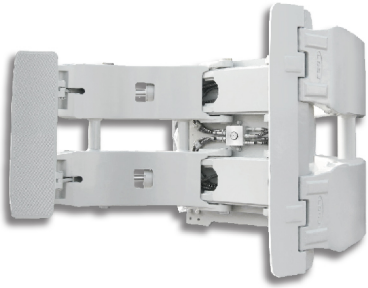

3-5 R-series Paper Roll Clamp 15

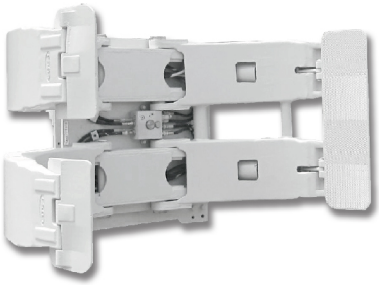

3-6 Separate Paper Roll Clamp 16

Introduction:

Paper roll clamp is widely used in the paper roll industry for damage free roll handling with maximum efficiency. LDSJ offers a full line of paper roll clamps to handle paper rolls regardless of diameter, weight or type of paper.For paper roll handling of every size in industries from stevedoring to printing, our Paper Roll Clamp will deliver.

22H-series
Paper Roll Clamp

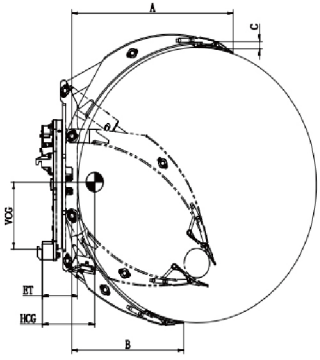

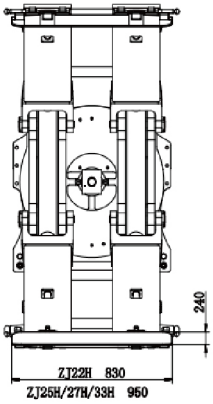

Capacity @ Load Center	Model	Opening Range	Mounting Class	Long Arm Length	Short Arm Length	Arm Thickness	Weight	Effective Thickness	Vertical Center of Gravity	Horizontal Center of Gravity	Available Forklift
Kg @ mm		(mm)		A (mm)	B(mm)	C(mm)	(kg)	ET (mm)	VCG (mm)	HCG (mm)	(t)
2200@1400	ZJ22H-A1	440-1400	II	989	658	39	677	236	410	321	2-2.5t
2200@1300	ZJ22H-A2	200-1300	II	933	645	39	670	236	355	295	2-2.5t
2200@1300	ZJ22H-A3	440-1300	II	933	645	39	660	236	360	288	2-2.5t
1950@1600	ZJ22H-A4	200-1600	II	1080	750	39	720	236	432	338	2-2.5t
1950@1600	ZJ22H-A5	500-1600	II	1080	750	39	710	236	420	330	2-2.5t
1700@1830	ZJ22H-A6	380-1830	II	1290	806	39	760	236	366	465	2-2.5t
1700@1830	ZJ22H-A7	680-1830	II	1290	806	39	755	236	367	458	2-2.5t
2050@1525	ZJ22H-A8	200-1525	II	1040	730	39	710	236	350	350	2-2.5t
2050@1525	ZJ22H-A9	490-1525	II	1040	730	39	705	236	360	352	2-2.5t
2200@1400	ZJ22H-A14	200-1400	II	989	658	39	685	236	400	310	2-2.5t
2200@700	ZJ22H-B1	440-1400	III	989	658	39	677	236	410	321	3-4.5t
2200@650	ZJ22H-B2	200-1300	III	933	645	39	670	236	355	295	3-4.5t
2200@650	ZJ22H-B3	440-1300	III	933	645	39	660	236	360	288	3-4.5t
1950@800	ZJ22H-B4	200-1600	III	1080	750	39	720	236	432	338	3-4.5t
1950@800	ZJ22H-B5	500-1600	III	1080	750	39	710	236	420	330	3-4.5t
1700@1830	ZJ22H-B6	380-1830	III	1290	806	39	760	236	366	465	3-4.5t
1700@1830	ZJ22H-B7	680-1830	III	1290	806	39	755	236	367	458	3-4.5t
2050@762	ZJ22H-B8	200-1525	III	1040	730	39	710	236	350	350	3-4.5t
2050@762	ZJ22H-B9	490-1525	III	1040	730	39	705	236	360	352	3-4.5t
2200@700	ZJ22H-B14	200-1400	III	989	658	39	685	236	400	310	3-4.5t

Notes:

1.Forklift trucks need to add 2 sets of oil lines;
2.Please obtain the actual comprehensive bearing capacity from the forklift manufacturer;
3.According to the needs of customers, we can provide clamping plates suitable for different paper roll clamps;
4.The odd number of the model number means that the short arm is adjustable, and the even number means that the short arm is fixed.

Features:

1.Reduced Roll Damage
· With two-way hydraulic lock to achieve two-way hydraulic self-lock;
· Clamp arms adopt high-strength alloy steel plate to reduce damage.
2.Fast Roll Handling
· 360° rotation to quickly transition to and from bilge position;
· Worm arm adopts involute gear to improve clamp arm speed.
3. Excellent Durability
· With large modulus slewing bearing to achieve high-strength capacity;
· Highly durable rotator parts to extend service life.

25H-series
Paper Roll Clamp

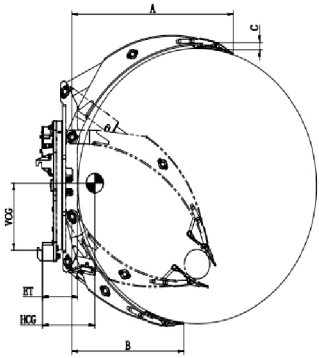

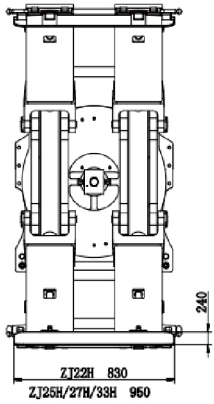

Capacity @ Load Center	Model	Opening Range	Mounting Class	Long Arm Length	Short Arm Length	Arm Thickness	Weight	Effective Thickness	Vertical Center of Gravity	Horizontal Center of Gravity	Available Forklift
Kg @ mm		(mm)		A (mm)	B(mm)	C(mm)	(kg)	ET (mm)	VCG (mm)	HCG (mm)	(t)
2500@1400	ZJ25H-B1	575-1400	III	1015	618	42	775	191	521	285	3-4.5t
2500@1300	ZJ25H-B2	200-1300	III	952	620	42	755	191	514	274	3-4.5t
2500@1300	ZJ25H-B3	450-1300	III	952	620	42	748	191	520	275	3-4.5t
2300@1600	ZJ25H-B4	200-1600	III	1125	710	42	823	191	518	307	3-4.5t
2300@1600	ZJ25H-B5	625-1600	III	1125	710	42	816	191	524	308	3-4.5t
2100@1830	ZJ25H-B6	200-1830	III	1245	820	42	883	191	536	341	3-4.5t
2100@1830	ZJ25H-B7	625-1830	III	1245	820	42	876	191	541	342	3-4.5t
2400@1525	ZJ25H-B8	200-1525	III	1068	678	42	812	191	517	293	3-4.5t
2400@1525	ZJ25H-B9	575-1525	III	1068	678	42	803	191	522	294	3-4.5t
2500@1400	ZJ25H-B14	200-1400	III	1015	618	42	780	191	516	285	3-4.5t

Notes:

1.Forklift trucks need to add 2 sets of oil lines;
2.Please obtain the actual comprehensive bearing capacity from the forklift manufacturer;
3.According to the needs of customers, we can provide clamping plates suitable for different paper roll clamps;
4.The odd number of the model number means that the short arm is adjustable, and the even number means that the short arm is fixed.

Features:

1.Reduced Roll Damage
· With two-way hydraulic lock to achieve two-way hydraulic self-lock;
· Clamp arms adopt high-strength alloy steel plate to reduce damage.
2.Fast Roll Handling
· 360° rotation to quickly transition to and from bilge position;
· Worm arm adopts involute gear to improve clamp arm speed.
3. Excellent Durability
· With large modulus slewing bearing to achieve high-strength capacity;
· Highly durable rotator parts to extend service life.

27H-series
Paper Roll Clamp

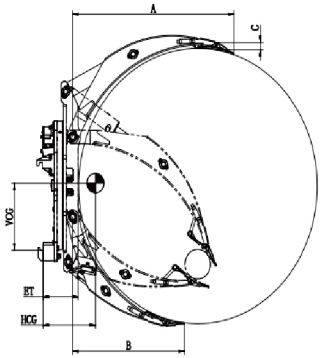

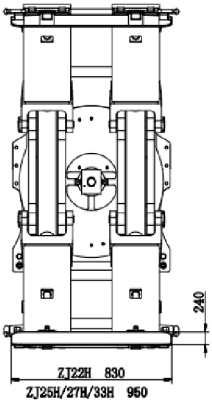

Capacity @ Load Center	Model	Opening Range	Mounting Class	Long Arm Length	Short Arm Length	Arm Thickness	Weight	Effective Thickness	Vertical Center of Gravity	Horizontal Center of Gravity	Available Forklift
Kg @ mm		(mm)		A (mm)	B(mm)	C(mm)	(kg)	ET (mm)	VCG (mm)	HCG (mm)	(t)
2800@1400	ZJ27H-B1	575-1400	III	1015	618	42	775	191	521	285	3-4.5t
3000@1300	ZJ27H-B2	200-1300	III	952	620	42	755	191	514	274	3-4.5t
3000@1300	ZJ27H-B3	450-1300	III	952	620	42	748	191	520	275	3-4.5t
2450@1600	ZJ27H-B4	200-1600	III	1125	710	42	823	191	518	307	3-4.5t
2450@1600	ZJ27H-B5	625-1600	III	1125	710	42	816	191	524	308	3-4.5t
2200@1830	ZJ27H-B6	200-1830	III	1245	820	42	883	191	536	341	3-4.5t
2200@1830	ZJ27H-B7	625-1830	III	1245	820	42	876	191	541	342	3-4.5t
2550@1525	ZJ27H-B8	200-1525	III	1068	678	42	812	191	517	293	3-4.5t
2550@1525	ZJ27H-B9	575-1525	III	1068	678	42	803	191	522	294	3-4.5t
2800@1400	ZJ27H-B14	200-1400	III	1015	618	42	780	191	516	285	3-4.5t

Notes:

1.Forklift trucks need to add 2 sets of oil lines;
2.Please obtain the actual comprehensive bearing capacity from the forklift manufacturer;
3.According to the needs of customers, we can provide clamping plates suitable for different paper roll clamps;
4.The odd number of the model number means that the short arm is adjustable, and the even number means that the short arm is fixed.

Features:

1.Reduced Roll Damage
· With two-way hydraulic lock to achieve two-way hydraulic self-lock;
· Clamp arms adopt high-strength alloy steel plate to reduce damage.
2.Fast Roll Handling
· 360° rotation to quickly transition to and from bilge position;
· Worm arm adopts involute gear to improve clamp arm speed.
3. Excellent Durability
· With large modulus slewing bearing to achieve high-strength capacity;
· Highly durable rotator parts to extend service life.

33H-series
Paper Roll Clamp

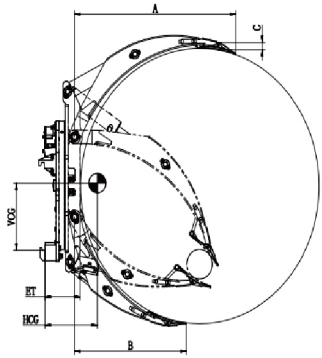

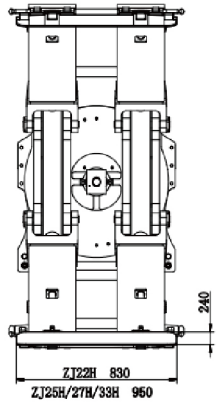

Capacity @ Load Center	Model	Opening Range	Mounting Class	Long Arm Length	Short Arm Length	Arm Thickness	Weight	Effective Thickness	Vertical Center of Gravity	Horizontal Center of Gravity	Available Forklift
Kg @ mm		(mm)		A (mm)	B(mm)	C(mm)	(kg)	ET (mm)	VCG (mm)	HCG (mm)	(t)
3300@1400	ZJ33H-B1	500-1400	III	1016	617	42	800	198	479	278	3-4.5t
3500@1300	ZJ33H-B2	200-1300	III	955	627	42	785	198	499	269	3-4.5t
3500@1300	ZJ33H-B3	425-1300	III	955	627	42	777	198	494	269	3-4.5t
2850@1600	ZJ33H-B4	200-1600	III	1122	711	42	860	198	495	305	3-4.5t
2850@1600	ZJ33H-B5	575-1600	III	1122	711	42	852	198	490	305	3-4.5t
2500@1830	ZJ33H-B6	200-1830	III	1250	823	42	890	198	514	335	3-4.5t
2500@1830	ZJ33H-B7	600-1830	III	1250	823	42	882	198	509	335	3-4.5t
3000@1525	ZJ33H-B8	200-1525	III	1075	681	42	845	198	495	291	3-4.5t
3000@1525	ZJ33H-B9	575-1525	III	1075	681	42	837	198	490	291	3-4.5t
3300@1400	ZJ33H-B14	200-1400	III	1016	617	42	808	198	484	278	3-4.5t

Notes:

1.Forklift trucks need to add 2 sets of oil lines;
2.Please obtain the actual comprehensive bearing capacity from the forklift manufacturer;
3.According to the needs of customers, we can provide clamping plates suitable for different paper roll clamps;
4.The odd number of the model number means that the short arm is adjustable, and the even number means that the short arm is fixed.

Features:

1.Reduced Roll Damage
· With two-way hydraulic lock to achieve two-way hydraulic self-lock;
· Clamp arms adopt high-strength alloy steel plate to reduce damage.
2.Fast Roll Handling
· 360° rotation to quickly transition to and from bilge position;
· Worm arm adopts involute gear to improve clamp arm speed.
3. Excellent Durability
· With large modulus slewing bearing to achieve high-strength capacity;
· Highly durable rotator parts to extend service life.

R-series
Paper Roll Clamp

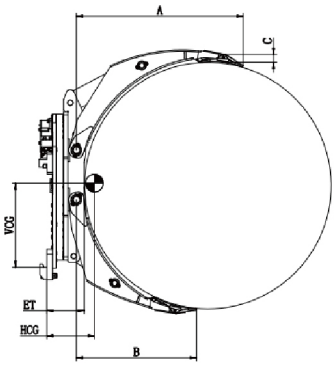

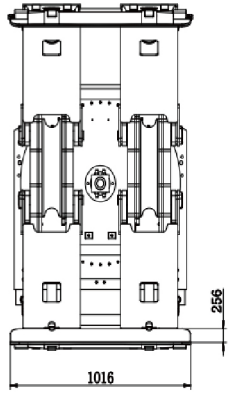

Capacity @ Load Center	Catalog Order NO.	Opening Range	Mounting Class	Long Arm Length	Short Arm Length	Arm Thickness	Weight	Effective Thickness	Vertical Center of Gravity	Horizontal Center of Gravity	Available Forklift
Kg @ mm		(mm)		A (mm)	B(mm)	C(mm)	(kg)	ET (mm)	VCG (mm)	HCG (mm)	(t)
1000@800	ZJ10R-A1	560-1600	II	995	675	45	420	135	330	290	1-2.5t
1100@750	ZJ11R-A1	450-1500	II	890	640	45	400	135	330	300	1-2.5t
1200@650	ZJ12R-A1	410-1300	II	860	570	45	376	135	340	255	1-2.5t
1200@650	ZJ12R-B1	410-1300	III	860	570	45	380	135	340	255	3-4.5t
1300@575	ZJ13R-A1	330-1150	II	745	535	45	385	135	335	250	1-2.5t
1300@575	ZJ13R-B1	330-1150	III	745	535	50	385	135	335	250	3-4.5t
3500@650	ZJ35R-B13A	300-1300	III	970	637	65	1015	229	495	298	5-7t
3500@760	ZJ35R-B1	610-1520	III	1025	745	65	1215	229	560	335	3-4.5t
3500@760	ZJ35R-B2	250-1520	III	1025	745	65	1235	229	570	340	3-4.5t
3500@800	ZJ35R-B3	600-1600	III	1096	776	65	1210	229	565	312	5-7t
3500@800	ZJ35R-B4	300-1600	III	1096	776	65	1220	229	573	316	5-7t
3500@760	ZJ35R-C1	610-1520	IV	1025	745	65	1215	229	560	335	5-7t
3500@760	ZJ35R-C2	250-1520	IV	1025	745	65	1235	229	570	340	5-7t
3500@800	ZJ35R-C3	600-1600	IV	1096	776	65	1210	229	565	312	5-7t
3500@800	ZJ35R-C4	300-1600	IV	1096	776	65	1220	229	573	316	5-7t
3000@915	ZJ35R-C6	380-1830	IV	1198	914	65	1225	229	596	358	5-7t
2700@1100	ZJ35R-C10	450-2200	IV	1425	1023	65	1375	229	622	403	5-7t
2700@1000	ZJ35R-C12	400-2000	IV	1420	861	65	1340	229	634	399	5-7t
3000@1250	ZJ45R-C12-03	400-2500	IV	1825	1120	65	1860	229	559	486	5-7t

Notes:

1.Forklift trucks need to add 2 sets of oil lines;
2.Please obtain the actual comprehensive bearing capacity from the forklift manufacturer;
3.According to the needs of customers, we can provide clamping plates suitable for different paper roll clamps;
4.The odd number of the model number means that the short arm is adjustable, and the even number means that the short arm is fixed.

Features:

1.Reduced Roll Damage
· With two-way hydraulic lock to achieve two-way hydraulic self-lock;
· Clamp arms adopt high-strength alloy steel plate to reduce damage.
2.Fast Roll Handling
· 360° rotation to quickly transition to and from bilge position;
· Worm arm adopts involute gear to improve clamp arm speed.
3. Excellent Durability
· With large modulus slewing bearing to achieve high-strength capacity;
· Highly durable rotator parts to extend service life.

Separate
Paper Roll Clamp

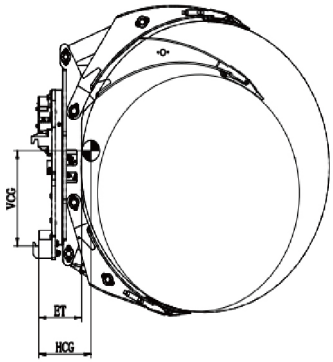

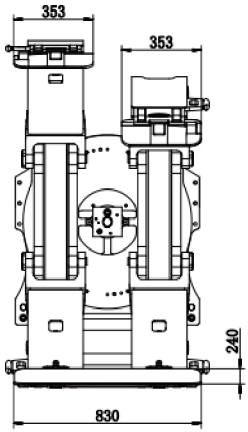

Capacity @ Load Center	Catalog Order NO.	Opening Range	Mounting Class	Pad Size	Weight	Effective Thickness	Vertical Center of Gravity	Horizontal Center of Gravity	Available Forklift
Kg @ mm		(mm)		H×W (mm)	(kg)	ET (mm)	VCG (mm)	HCG (mm)	(t)
2200@700	ZJ22HA-B14	200-1400	III	2×(358×232)	680	241	400	310	3-4.5t

Notes:

1.Forklift trucks need to add 2 sets of oil lines;
2.Please obtain the actual comprehensive bearing capacity from the forklift manufacturer;
3.According to the needs of customers, we can provide clamping plates suitable for different paper roll clamps;

Features:

1.Reduced Roll Damage
· With two-way hydraulic lock to achieve two-way hydraulic self-lock;
· Clamp arms adopt high-strength alloy steel plate to reduce damage.
2.Fast Roll Handling
· 360° rotation to quickly transition to and from bilge position;
· Separate long arm can hold pape rolls of different diameters to improve efficency.
3. Excellent Durability
· With large modulus slewing bearing to achieve high-strength capacity;
· Highly durable rotator parts to extend service life.

Paper Roll Clamp
Worksheet

Customer information

Host factory/agent _____ Contact _____

Address _____ Post _____

Telephone _____ Fax _____ Email _____

End users _____ Contact _____

Address _____ Post _____

Telephone _____ Fax _____ Email _____

Data on individual roll parameters
(note: mm are all the following parameter units)

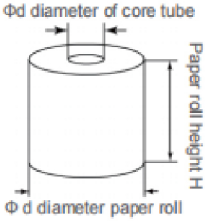

Height H range values _____ Weight _____

Core tube diameter Φd range values _____

Paper roll diameter Φd range values _____

Other notes _____

Working condition

Paper roll packaging type

☐ Kraft paper ☐ Packaging film ☐ Banding belt ☐ Other

Working conditions of paper roll

☐ Does the diameter of the reel vary greatly?

☐ Do you need to operate in small Spaces such as containers, freight cars?

☐ Do I need to hold two rolls of different diameters at one time?

☐ Do you need a forward tilting function?

Are there any other special operating conditions?

Paper roll stacking

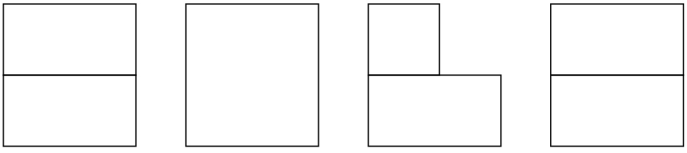

☐ Double roll, top to bottom, Use a single film for packaging

☐ Single paper roll Single pack aging film pack aging

☐ Two different diameters of paper rolls superimposed

☐ Multiple rolls of the same diameter superimposed

☐ Other stacking methods, please specify

Paper Roll Clamp
Worksheet

Type of paper roll

- ☐ Press paper
- ☐ Paper / pictorial paper
- ☐ Advanced Calendar Paper
- ☐ Stone paper
- ☐ Kraft/corrug ated
- ☐ ough Case Paper / Ash Case Paperboard
- ☐ Milk cartons on paper/waxed paper
- ☐
- ☐ Coated carton board paper
- ☐ Low density soft paper
- ☐ Medium density soft paper
- ☐ High density soft paper
- ☐ Dry pulp board/roll paper
- ☐ Plastic /Overmolded paper
- ☐ Carbon free carbon paper
- ☐ Gypsum board
- ☐ Translucent paper/greaseproof paper
- ☐ Other

Identify the appropriate appliance application

- ☐ Freight cars
- ☐ Trailer
- ☐ Warehousing
- ☐ Cooperate with feeding machine
- ☐ Erminal handling
- ☐ Barges transport
- ☐ Other

Main parameters of forklift

Forklift model	Nominal carrying capacity(Kg)	Forklift installation class	Forklift voltage(v)	Additional oil		Lift the door frame(mm)	Back height of door frame (mm)
				pressure(bar)	traffic(LPM)		
Door frame Free lift height(mm)		Door frame Before the Angle		Horizontal distance from thecenter of the front wheel to the front of the cargo fork (mm)		Horizontal distance from front end of fork to center of rated load(mm)	

If large forklift is used, please specify the type of forklift

The selection

Plate type

- ☐ Standard plywood
- ☐ Bolted - tight rubber pad splint
- ☐ Soft paper splint
- ☐ Other

Instructions

Have you ever used a LDSJ reel?

- ☐ Yes. If yes, the current model of the paper coil is. Fittings number S/N
- ☐ No.

Are there any special instructions on the use of fixtures? If yes, please describe: _____

Rotator

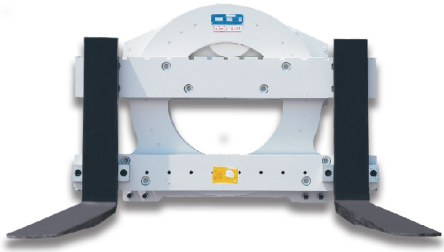

4-1 L-series Rotator 20

4-2 J-series Rotator 21

Introduction:

LDSJ Rotators give you the safe operation with standard forks can be fixed by means of square stops and 360° rotating for container turning or emptying operation. LDSJ Rotators are widely used in food, chemical, sanitation, recycle, casting industries and general manufacturing- anywhere it is necessary to dump bins or tote boxes.

L-series
Rotator

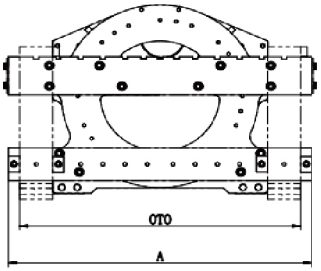

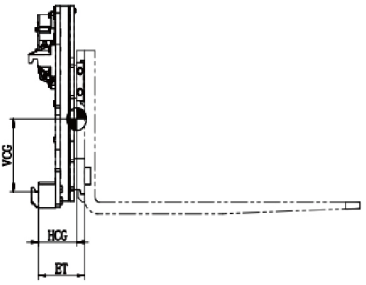

Capacity @ Load Center	Catalog Order NO	Overall Width	Carriage Width	Fork Pocket Width	Fork Max Spacing	Mounting Class	Effective Thickness	Horizontal Center of Gravity	Vertical Center of Gravity	Weight	Available Forklift
Kg @ mm		C(mm)	B(mm)	(mm)	OTO (mm)	Forklift/Fork	ET (mm)	HCG (mm)	VCG (mm)	(kg)	(t)
1700@500	XZ17L-A1	843	815	100	725	II / II	128	61	215	200	1-2.5t
2200@500	XZ22L-A2	975	942	100/122	862	II / II	194	102	297	270	2-2.5t
3000@500	XZ30L-B1	1180	1145	125	1062	III/III	194	121	310	362	3-4.5t
3500@500	XZ35L-B1	1275	1240	125/150	1160	III/III	210	169	310	383	3-4.5t
5400@500	XZ60L-C1	1585	1550	150	1470	IV/IV	233	139	322	640	5-7t

Notes:

1.Forklift trucks need to add 1 sets of oil lines;
2.Please obtain the actual comprehensive bearing capacity from the forklift manufacturer;
3.The fork can be added according to user needs, please pay attention to the carrying capacity of the fork itself;
4.The forks of the rotator must be equipped with a middle hook, and the rotator is equipped with a middle hook when leaving the factory.

Features:

· Highly durable gear drive box and ring gear to provide superior service life;
· With large modulus slewing bearing to achieve high-strength capacity;
· Observation hole in the middle of the rotator to provide maximum visibility for the forklift driver.

J-series
Rotator

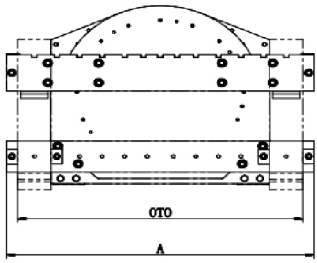

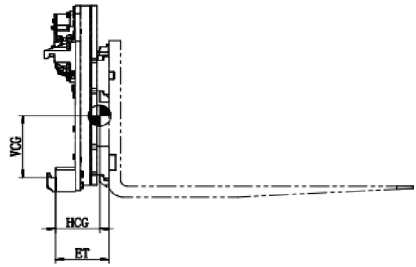

Capacity @ Load Center	Catalog Order NO	Overall Width	Carriage Width	Fork Pocket Width	Fork Max Spacing	Mounting Class	Effective Thickness	Horizontal Center of Gravity	Vertical Center of Gravity	Weight	Available Forklift
Kg @ mm		C(mm)	B(mm)	(mm)	OTO (mm)	Forklift/Fork	ET (mm)	HCG (mm)	VCG (mm)	(kg)	(t)
1700@500	XZ17J-A1	840	815	100	712	II / II	128	68	260	195	1-2.5t
2200@500	XZ22J-A1	1180	1145	100/122	1040	II / II	189	125	310	293	1-2.5t
2200@500	XZ22J-A2	975	942	100/122	840	II / II	189	125	305	279	1-2.5t
2200@500	XZ22J-A3	840	815	100/122	713	II / II	189	125	305	335	1-2.5t
2200@500	XZ22J-B1	970	942	100/122	840	III / II	189	125	305	342	3-3.5t
3000@500	XZ30J-B1	1180	1145	125	1060	III/III	202	125	292	392	3-4.5t
3000@500	XZ30J-B2	1410	1375	125	1290	III/III	202	125	292	415	3-4.5t
3000@500	XZ30J-B3	1180	1145	125/100	1065	III/ II	202	125	310	331	3-4.5t
3000@500	XZ30J-B4	1305	1270	125	1158	III/III	202	125	292	406	3-4.5t
3000@500	XZ30J-B5	1363	1343	125	1260	III/III	202	125	292	412	3-4.5t
3500@500	XZ35J-B1	1275	1240	125/150	1157	III/III	207	138	295	415	3-4.5t
3500@500	XZ35J-B2	1100	1065	125/150	925	III/III	207	135	280	398	3-4.5t
3500@500	XZ35J-B3	1633	1600	125/150	1500	III/III	207	138	295	476	3-4.5t
3500@500	XZ35J-B4	1275	1240	125/150	1135	III/III	207	135	322	406	3-4.5t
4500@500	XZ45J-B1	1600	1575	125/150	1445	III/III	220	139	322	610	3-4.5t
4500@500	XZ45J-B2	1341	1300	125/150	1200	III/III	220	135	280	572	3-4.5t
4500@500	XZ45J-B3	1585	1550	125/150	1470	III/IV	183	102	300	603	3-4.5t
4500@500	XZ45J-B4	1560	1525	125	1413	III/III	220	135	322	685	3-4.5t
5400@500	XZ60J-C1	1585	1550	150	1470	IV/IV	233	139	322	667	5-7t
5400@500	XZ60J-C2	1149	1115	150/125	985	IV/III	233	139	322	623	5-7t
5400@500	XZ60J-C3	1609	1575	150/125	1445	IV/III	233	139	322	679	5-7t
5400@500	XZ60J-C4	1735	1700	150	1612	IV/IV	233	139	322	689	5-7t
5400@500	XZ60J-C5	1815	1780	150	1700	IV/IV	233	139	322	735	5-7t

Notes:

1.Forklift trucks need to add 1 sets of oil lines;
2.Please obtain the actual comprehensive bearing capacity from the forklift manufacturer;
3.The fork can be added according to user needs, please pay attention to the carrying capacity of the fork itself;
4.The forks of the rotator must be equipped with a middle hook, and the rotator is equipped with a middle hook when leaving the factory.

Features:

· Highly durable gear drive box and ring gear to provide superior service life;
· With large modulus slewing bearing to achieve high-strength capacity;
· High temperature alloy steel plate for casting industry.

Bale Clamp

5-1 J-series Bale Clamp 25

5-2 T-type Bale Clamp 26

5-3 Anti-rail Bale Clamp 27

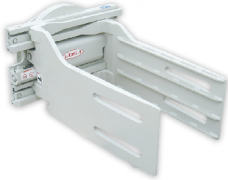

5-4 Revoling Bale Clamp 28

Introduction:

Bale clamps can efficiently handle many types of baled products such as cotton, synthetic textile bales, corrugated, newsprint, rag, hay, metal and other scrap bales without wrok platform condition.

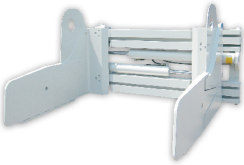

5-5 Pulp Bale Clamp 29

Introduction:

Pulp bale clamps can efficiently and economically handle nearly any type of baled products and widely used in ports and papermaking industry.

J-series
Bale Clamp

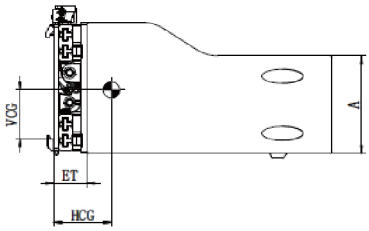

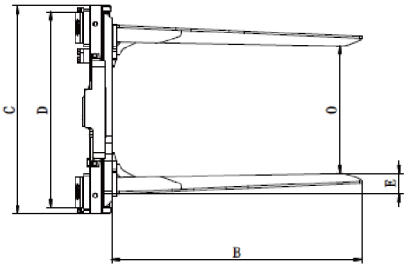

Capacity @ Load Center	Catalog Order NO.	Mounting Class	Opening Range	Arm Height	Arm Length	Frame Width	Hook Spread	Arm Thickness	Weight	Effective Thickness	Vertical Center of Gravity	Horizontal Center of Gravity
Kg @ mm		(mm)	O (mm)	A (mm)	B(mm)	C(mm)	D(mm)	E(mm)	(kg)	ET (mm)	VCG (mm)	HCG (mm)
2200@500	2200@500	II	615-1925	550	1200	1010	920	100	580	159	247	313
2200@500	2200@500	II	615-1925	550	1200	1010	920	100	580	159	247	313
2200@500	2200@500	II	510-2375	475	1200	1680	900	100	640	159	240	237
2200@500	2200@500	II	510-2375	475	1200	1680	900	100	640	159	240	237
2000@500	2000@500	II	470-2310	475	1500	1680	1040	100	705	159	232	319
2200@500	2200@500	III	615-1925	475	1200	1010	950	100	540	159	240	277
2200@500	2200@500	III	615-1925	475	1200	1010	950	100	540	159	240	277
2200@500	2200@500	III	510-2375	475	1200	1680	1040	100	640	159	237	245
2200@500	2200@500	III	510-2375	475	1200	1680	1040	100	640	159	237	245
2000@500	2000@500	III	470-2310	475	1500	1680	1040	100	705	159	234	324

Notes:

1. Please obtain the actual comprehensive bearing capacity of forklift/attachment from the forklift factory.
2. The forklift truck needs to add 2 groups of oil lines.
3. The arm thickness is the needed minimum wedge gap size when clamping, but not the real thickness.

Features:

1. Imported load keeping valves and cone sealed high-performance rubber hoses.
2. High-performance alloy steel plates for left and right clamping panels.
3. The connection blocks are integrally charged with good anti-bending performance.
4. With side shift function inside.

T-type
Bale Clamp

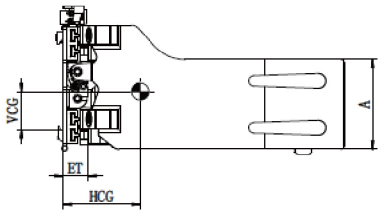

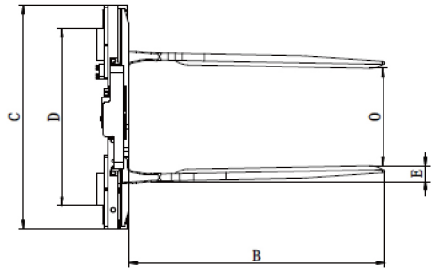

Capacity @ Load Center	Catalog Order NO.	Mounting Class	Opening Range	Arm Height	Arm Length	Frame Width	Hook Spread	Arm Thickness	Weight	Effective Thickness	Vertical Center of Gravity	Horizontal Center of Gravity	Available Forklift
Kg @ mm		(mm)	O (mm)	A (mm)	B(mm)	C(mm)	D(mm)	E(mm)	(kg)	ET (mm)	VCG (mm)	HCG (mm)	(t)
1900@500	RJ18ST-A1	II	460-1700	418	1190	1040	825	70	460	117	175	360	1-2.5t
1900@500	RJ18ST-A2	II	580-1955	418	1190	1100	885	70	530	117	177	320	1-2.5t
1900@500	RJ18ST-A3	II	460-1755	418	1190	1040	825	70	470	117	177	358	1-2.5t
1900@500	RJ18ST-B1	III	460-1755	418	1190	1040	889	70	490	122	225	344	3-4.5t
2200@500	RJ22ST-B1	III	460-2325	460	1200	1680	1040	75	690	134	231	311	3-4.5t
2200@500	RJ22ST-B2	III	600-2460	460	1200	1680	1040	75	710	134	232	307	3-4.5t
2700@500	RJ25ST-B1	III	570-1880	460	1200	1010	950	75	610	132	222	337	3-4.5t
2700@500	RJ25ST-B5	III	560-1930	460	1200	1100	970	75	600	132	228	341	3-4.5t
2700@500	RJ25ST-B17	III	555-2125	460	1200	1265	1025	75	630	132	229	329	3-4.5t
2700@500	RJ25ST-B17-01	III	550-2120	460	1370	1265	1025	75	670	132	225	390	3-4.5t
4000@600	RJ40ST-B2	III	835-2205	490	1300	1300	1025	65	1180	206	260	318	3-4.5t
4000@600	RJ40ST-B3	III	580-2130	490	1250	1300	1025	65	1160	206	280	307	3-4.5t
4000@600	RJ40ST-C1	IV	580-2130	490	1250	1300	1015	65	1220	211	263	301	5-7t

Notes:

1. Please obtain the actual comprehensive bearing capacity of forklift/attachment from the forklift factory.
2. The forklift truck needs to add 2 groups of oil lines.
3. The arm thickness is the needed minimum wedge gap size when clamping, but not the real thickness.

Features:

1. Imported load keeping valves and cone sealed high-performance rubber hoses.
2. High-performance alloy steel plates for left and right clamping panels.
3. The connection blocks are integrally charged with good anti-bending performance.
4. With side shift function inside.
5. High strength T-bar enables smooth arm movement and long service life of bearings.

Anti-rail
Bale Clamp

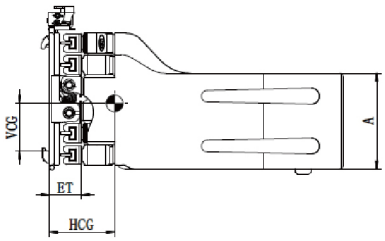

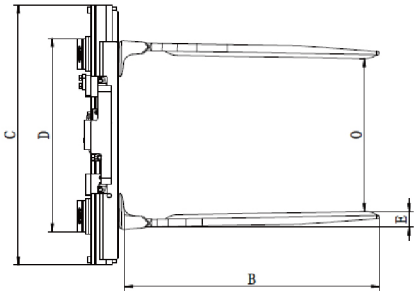

Capacity @ Load Center	Catalog Order NO.	Mounting Class	Opening Range	Arm Height	Arm Length	Frame Width	Hook Spread	Arm Thickness	Weight	Effective Thickness	Vertical Center of Gravity	Horizontal Center of Gravity	Available Forklift
Kg @ mm		(mm)	O (mm)	A (mm)	B(mm)	C(mm)	D(mm)	E(mm)	(kg)	ET (mm)	VCG (mm)	HCG (mm)	(t)
2000@500	RJ20ST-A2	II	740-2110	460	1220	1250	930	75	800	154	210	320	1-2.5t
2500@500	RJ25ST-A2	II	455-2315	460	1220	1700	930	75	860	154	220	300	1-2.5t
2500@500	RJ25ST-B2	III	455-2315	460	1220	1700	930	75	880	154	235	286	3-4.5t
2500@500	RJ25ST-B10	III	590-2455	460	1220	1700	930	75	890	154	233	300	3-4.5t
3000@500	RJ30ST-A3	II	520-1880	460	1220	1130	930	75	750	154	233	324	1-2.5t
3000@500	RJ30ST-B1	III	740-2110	460	1220	1250	930	75	790	154	229	312	3-4.5t
3000@500	RJ30ST-B5	III	520-1880	460	1220	1130	930	75	750	154	230	324	3-4.5t
3000@500	RJ30ST-C2	IV	535-2135	460	1220	1370	930	75	860	154	233	288	5-7t

Notes:

1. Please obtain the actual comprehensive bearing capacity of forklift/attachment from the forklift factory.
2. The forklift truck needs to add 2 groups of oil lines.
3. The arm thickness is the needed minimum wedge gap size when clamping, but not the real thickness.

Features:

1. Imported load keeping valves and cone sealed high-performance rubber hoses.
2. High-performance alloy steel plates for left and right clamping panels.
3. The connection blocks are integrally charged with good anti-bending performance.
4. With side shift function inside.
5. Anti-rail structure has high strength and better bearing capacity.
6. Reduce goods impact and protect oil cylinder.

Revolving
Bale Clamp

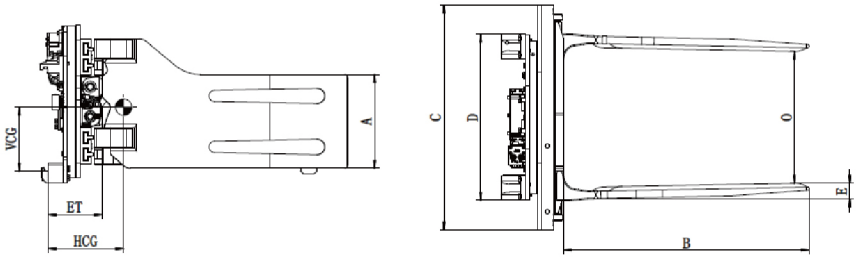

Capacity @ Load Center	Catalog Order NO.	Mounting Class	Opening Range	Arm Height	Arm Length	Frame Width	Hook Spread	Arm Thickness	Weight	Effective Thickness	Vertical Center of Gravity	Horizontal Center of Gravity	Available Forklift
Kg @ mm		(mm)	O (mm)	A (mm)	B(mm)	C(mm)	D(mm)	E(mm)	(kg)	ET (mm)	VCG (mm)	HCG (mm)	(t)
1900@500	RJ19RT-A1	II	445-1670	418	990	1040	815	75	530	198	221	275	1-2.5t
1900@500	RJ19RT-A2	II	460-1700	418	1190	1040	814	75	710	257	303	355	1-2.5t
1900@500	RJ19RT-A3	II	580-1960	418	1190	1040	814	75	760	252	295	339	1-2.5t
2700@500	RJ30RT-B1	III	570-1880	460	1200	1010	814	75	790	259	313	371	3-4.5t
2700@500	RJ30RT-B2	III	650-2020	460	1200	1100	814	75	810	259	313	369	3-4.5t

Notes:

1. Please obtain the actual comprehensive bearing capacity of forklift/attachment from the forklift factory.
2. The forklift truck needs to add 2 groups of oil lines.
3. The arm thickness is the needed minimum wedge gap size when clamping, but not the real thickness.

Features:

1. Two-way hydraulic locks for rotating oil lines ensure safety when working.
2. High-performance alloy steel plates for left and right clamping panels.
3. The connection blocks are integrally charged with good anti-bending performance.
4. 360 degrees of rotation.
5. Rotating oil hinge has the self-locking function.

Pulp
Bale Clamp

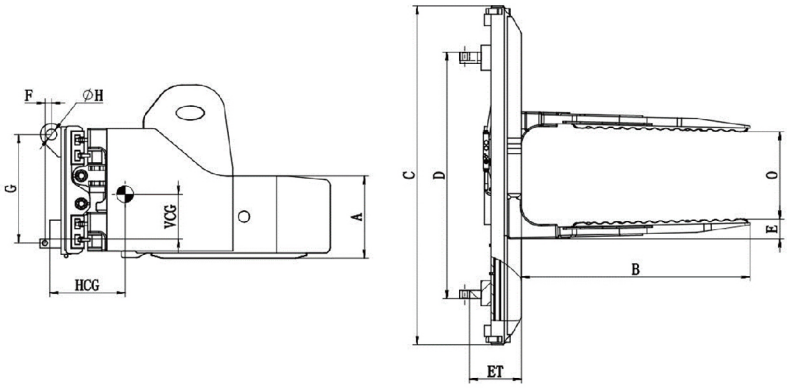

Capacity @ Load Center	Catalog Order NO.	Mounting Class	Opening Range	Arm Height	Arm Length	Frame Width	Hook Spread	Arm Thickness	Distance between upper and lower hook holes	Mounting dimensions	Diameter of Hook through shaft	Weight	Effective Thickness	Vertical Center of Gravity	Horizontal Center of Gravity	Available Forklift
Kg @ mm		(mm)	O (mm)	A (mm)	B(mm)	C(mm)	D(mm)	E(mm)	F(mm)	G(mm)	H(mm)	(kg)	ET (mm)	VCG (mm)	HCG (mm)	(t)
6500@800	ZB65G-X1-01	Hook-Mounted	600-3170	585	1590	2420	1760	105	46	775	76	2600	297	380	493	Heli 12t
6500@800	ZB65G-X2	Hook-Mounted	600-3170	585	1590	2420	1200	105	85	880	86	2640	395	391	513	Linde 12t

Notes:

1. Please obtain the actual comprehensive bearing capacity of forklift/attachment from the forklift factory.
2. The forklift truck needs to add 2 groups of oil lines.
3. The arm thickness is the needed minimum wedge gap size when clamping, but not the real thickness.

Features:

1. Imported load keeping valves and cone sealed high-performance rubber hoses.
2. High-performance alloy steel plates for left and right clamping panels.
3. With side shift function inside.
4. High visiblility strcture.

Bale Clamp
Worksheet

Customer information

Host factory/agent _____ Contact _____

Address _____ Post _____

Telephone _____ Fax _____ Email _____

End users _____ Contact _____

Address _____ Post _____

Telephone _____ Fax _____ Email _____

Forklift information

Forklift brand	Model	Door frame Hoisting height (mm)	Bearing capacity (kg)	Pallet fork width (mm)	Additional oil pressure (bar)	Additional oil traffic (L/min)

Cargo information

☐ Waste paper ☐ Cost of raw materials ☐ Pulp

☐ Cotton ☐ Hair products ☐ Other

Is there any restriction on clamping on both sides of the unit cargo surface (such as clamping only on upper or lower part)?

_____

_____

_____

_____

	A single goods	Storage unit
Length L		
Width W		
Height H		
Weight G		
Number N		
Othe		

Stacking description

Soft package type	
Stacking arrangement	
Whether the package	
Other	

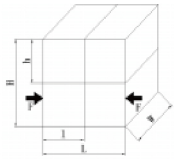

Selection matters needing attention

1.Is there any special working condition requiring special arm range, maximum arm and minimum arm? Pay attention to the relationship between the arm range and lateral displacement (the lateral displacement at
the position of maximum and minimum arm is 0).
2.Install the level.
3.Other Supplementary Notes

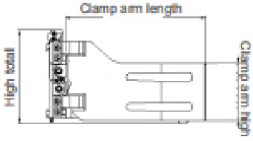

Carton Clamp

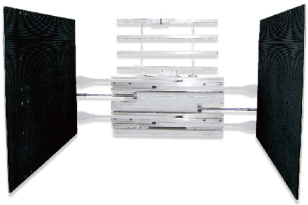

6-1 Carton Clamp 33

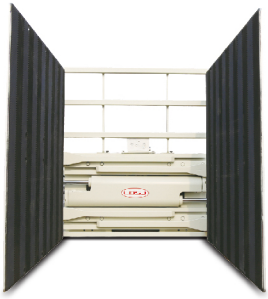

6-2 D-Series Carton Clamp 34

Introduction:

Carton clamps can securely handle and stack various goods packed in cartons without pallets and are widely used in the warehousing, beverage, appliance and electronics industries.

6-3 Tobacco Carton Clamp 35

Introduction:

Tobacco carton clamps can especially handle and stack redrying tobacco cartons without pallets. Clamp arms can be changed as requested in different working condition.

Carton
Clamp

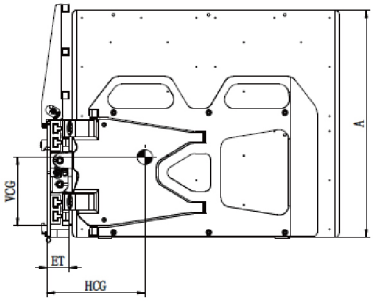

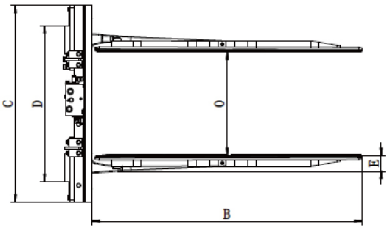

Capacity @ Load Center	Catalog Order NO.	Mounting Class	Opening Range	Arm Height	Arm Length	Frame Width	Hook Spread	Arm Thickness	Weight	Effective Thickness	Vertical Center of Gravity	Horizontal Center of Gravity	Available Forklift
Kg @ mm			O(mm)	A(mm)	B(mm)	C(mm)	D(mm)	E(mm)	(kg)	ET (mm)	VCG (mm)	HCG (mm)	(t)
1400@700	ZX14J-A1	II	560-1940	1200	1420	1040	825	90	875	117	371	504	2-2.5t
1400@700	ZX14J-A2	II	760-2140	1200	1420	1040	825	90	890	117	369	497	2-2.5t
1400@700	ZX14J-A3	II	590-1970	1200	1480	1040	825	90	900	117	369	534	2-2.5t
1200@600	ZX12J-A1	II	400-1570	1200	1220	1040	825	90	785	117	368	429	2-2.5t
1400@600	ZX14J-A4	II	565-1945	1200	1220	1040	825	90	800	117	367	424	2-2.5t
1400@600	ZX14J-B1	III	595-1975	1200	1220	1040	1025	90	800	117	367	424	3-4.5t

Notes:

1. Please obtain the actual comprehensive bearing capacity of forklift/attachment from the forklift factory.
2. The forklift truck needs to add 2 groups of oil lines.
3. The arm thickness is the needed minimum wedge gap size when clamping, but not the real thickness.
4. Equipped with four-gear pressure regulating valve when delivered from the factory.

Features:

1. Imported load keeping valves and cone sealed high-performance rubber hoses.
2. Four-gear pressure regulating valve can be used to set different suitable clamping power for different goods.
3. Equipped with sideshifting function inside.
4. High-performance alloy steel plates for left and right clamping panels.
5. Connection blocks are integrally charged with good anti-bending performance.

D-Series
Carton Clamp

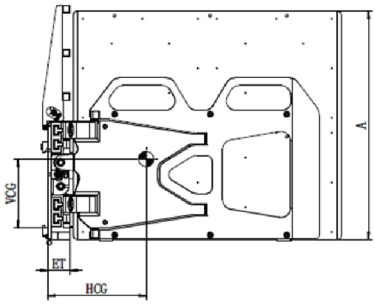

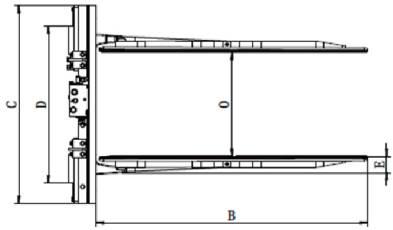

Capacity @ Load Center	Catalog Order NO.	Mounting Class	Opening Range	Arm Height	Arm Length	Frame Width	Hook Spread	Arm Thickness	Weight	Effective Thickness	Vertical Center of Gravity	Horizontal Center of Gravity	Available Forklift
Kg @ mm			O(mm)	A(mm)	B(mm)	C(mm)	D(mm)	E(mm)	(kg)	ET (mm)	VCG (mm)	HCG (mm)	(t)
1200@600	ZX12D-A1	II	400-1570	1200	1220	1040	825	90	765	117	368	429	2-2.5t
1360@700	ZX14D-A1	II	560-1940	1200	1420	1040	825	90	855	117	371	504	2-2.5t
1360@700	ZX14D-A2	II	760-2140	1200	1420	1040	825	90	870	117	369	497	2-2.5t
1360@700	ZX14D-A3	II	565-1945	1200	1220	1040	825	90	780	117	367	424	2-2.5t
1360@700	ZX14D-A4	II	565-1945	1200	1220	1040	825	90	715	117	352	396	2-2.5t
1360@700	ZX14D-B2	III	560-1920	1200	1420	1040	825	90	740	117	345	384	3-4.5t
1360@700	ZX14D-B3	III	560-1940	1200	1420	1040	825	90	880	117	367	506	3-4.5t
1360@700	ZX14D-B4	III	520-2400	1200	1480	1600	970	90	970	117	365	505	3-4.5t
1360@700	ZX14D-B5	III	500-2100	1200	1480	1400	960	90	935	117	368	512	3-4.5t

Notes:

1. Please obtain the actual comprehensive bearing capacity of forklift/attachment from the forklift factory.
2. The forklift truck needs to add 2 groups of oil lines.
3. The arm thickness is the needed minimum wedge gap size when clamping, but not the real thickness.
4. Equipped with four-gear pressure regulating valve when delivered from the factory.

Features:

1. Imported load keeping valves and cone sealed high-performance rubber hoses.
2. Four-gear pressure regulating valve can be used to set different suitable clamping power for different goods.
3. Equipped with sideshifting function inside.
4. High-performance alloy steel plates for left and right clamping panels.
5. Connection blocks are integrally charged with good anti-bending performance.

Tobacco
Carton Clamp

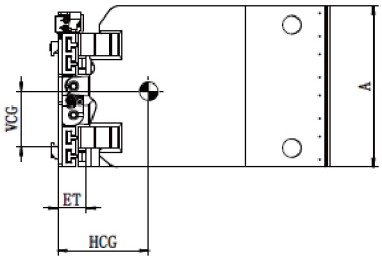

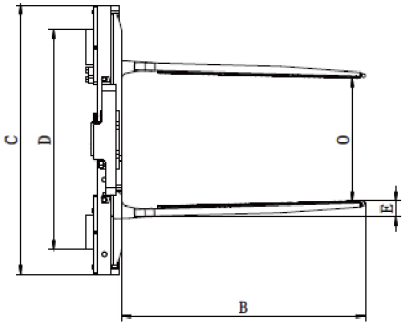

Capacity @ Load Center	Catalog Order NO.	Mounting Class	Opening Range	Arm Height	Arm Length	Frame Width	Hook Spread	Arm Thickness	Weight	Effective Thickness	Vertical Center of Gravity	Horizontal Center of Gravity	Available Forklift
Kg @ mm			O(mm)	A(mm)	B(mm)	C(mm)	D(mm)	E(mm)	(kg)	ET (mm)	VCG (mm)	HCG (mm)	(t)
1800@500	YX18G-A3	II	460-1740	565	1340	1040	825	60	640	117	212	451	2-2.5t
1800@500	YX18G-A6	II	535-1910	700	1035	1170	955	60	600	123	240	392	2-2.5t
1800@500	YX18G-A7	II	530-1905	700	1125	1170	955	65	630	123	240	431	2-2.5t
1800@500	YX18G-A8	II	465-1745	565	1165	1040	825	65	580	117	202	386	2-2.5t
1800@500	YX18G-A9	II	455-1700	500	1100	1040	825	65	500	117	191	386	2-2.5t
1800@500	YX18G-B1	III	465-1745	565	1150	1040	885	65	580	122	250	357	3-4.5t
1800@500	YX18G-B2	III	460-1740	565	1370	1040	885	65	670	122	248	459	3-4.5t
2200@500	YX22G-B1	III	540-1900	700	1125	1170	1050	65	640	123	280	425	3-4.5t

Notes:

1. Please obtain the actual comprehensive bearing capacity of forklift/attachment from the forklift factory.
2. The forklift truck needs to add 2 groups of oil lines.
3. The arm thickness is the needed minimum wedge gap size when clamping, but not the real thickness.

Features:

1. Imported load keeping valves and cone sealed high-performance rubber hoses.
2. High-performance alloy steel plates for left and right clamping panels.
3. Equipped with sideshifting function inside.
4. Connection blocks are integrally charged with good anti-bending performance.

Bale Clamp
Worksheet

Customer information

Host factory/agent _____ Contact _____

Address _____ Post _____

Telephone _____ Fax _____ Email _____

End users _____ Contact _____

Address _____ Post _____

Telephone _____ Fax _____ Email _____

Cargo condition information

Type of goods (refrigerators, washing machines, television, air conditioners, water heaters, LPG stoves and other appliances)

☐ Washing machine ☐ Television ☐ Air conditioners ☐ Refrigerator

☐ Water heater ☐ Liquefied petroleum gas stove ☐ Other appliances

Stacking arrangement

Storage stacking method

Stacking method during loading

Description of carton stacking code

Carton type

Packed way

Whether the package? ☐ Yes. ☐ No.

Internal structure of carton (whether there is reinforced support)? ☐ Yes. ☐ No.

Single transhipment or stowed cargo information

Project	Monomer carton	Single transhipment / stowage	Unit	Note
Length(l/L)			mm	
Width(w/W)			mm	
Height(h/H)			mm	
Weight(g/G)			kg	
Load Reststance(f/F)			N	
Stacking layers are M				
Quantity of goods N				
Other		Whether monomer transport is required? ☐ Yes. ☐ No.		

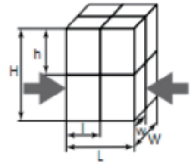

Note: g is the mass of single carton, G is the total mass of single transfer or stacking, the length is the direction of arm range, and the width is the direction of arm length. If the clamping side of the cargo is limited to clamping (if only upper or lower), please specify

The internal structure of the carton (whether there is reinforced support or other stuffing), the description of the shape and characteristics of the goods, whether there are raised and non-clamped parts, please explain in detail.

_____

_____

_____

Bale Clamp
Worksheet

Confirm cargo clamping method

Clamping along the width

Clamping along the length

Note: The selection of cargo clamping method should be combined with the above information, according to the weight of stacking to determine the quantity of clamping and stacking form; According to the distribution and structural characteristics of the internal support or stuffing, select the appropriate clamping surface, and consider the appropriate clamping force to ensure reliable clamping of goods.
Other description of the goods _____

Requirements on clamping force of goods

Description of cargo clamping force requirements _____

Forklift information

Forklift brand	Model	Door frame type	Maximum lift of portal frame	Bearing capacity	Cargo fork size

Cargo fork mounting class/width	Additional number of oil routes	Additional oil pressure	Additional oil flow rate	Remarks (whether twin, etc.)

Notes for Selection

Whether there is a special condition of the arm range

☐ Yes. Maximum arm range _____ Maximum arm range _____

☐ No.

Note: when the maximum and minimum tensioning arms are located, there is no lateral movement function, and the lateral movement is 0.

Optional accessories

☐ Electronic pressure regulating valve

Whether there is a special condition of the need to add high shelf, splint, splint front to pick up goods, please specify:

Other Supplementary notes: _____

Confirm the model

ZX 14 D - A 1

"ZX" stands for carton clip

"14" stands for carrying capacity of 1360Kg

"D" stands for electric vehicle fitting

"A" stands for installation class 2

"1" stands for series number "1"

Different series Numbers mean that they are different from conventional models in terms of arm extension range, arm length, arm height and frame width.

Tyre Clamp

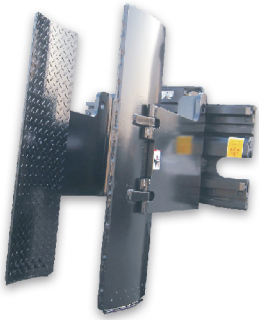

7-1 Sideshifting Tyre Clamp 39

7-2 Revolving Tyre Clamps 40

Introduction:

LDSJ Tyre Clamps offer safe and efficient handling worldwide for moving or stacking tyres. No matter what size, weight or type of tyres you're handling, LDSJ has the great attachment designed to match your product.

Sideshifting
Tyre Clamp

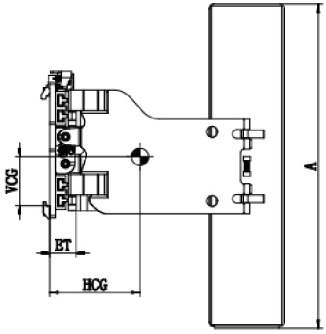

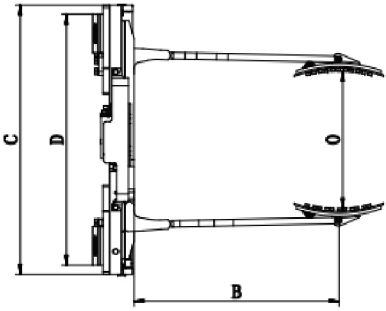

Capacity @ Load Center	Catalog Order NO.	Mounting Class	Clamping Range	Opening Range	Arm Height	Arm Length	Frame Width	Effective Thickness	Vertical Center of Gravity	Horizontal Center of Gravity	Weight	Available Forklift
Kg @ mm			(mm)	O(mm)	A(mm)	B(mm)	C(mm)	ET (mm)	VCG (mm)	HCG (mm)	(kg)	(t)
1000@680	LT10G-A1	II	580-1360	500-1680	1200	680	1040	122	184	331	540	1-2.5t
1000@680	LT10G-B1	III	580-1600	500-1680	1200	800	1040	127	230	399	625	1-2.5t

Notes:

1.Forklift trucks need to add 2 sets of oil lines;
2.Please obtain the actual comprehensive bearing capacity from the forklift manufacturer;
3.The effective clamping range is the recommended value of the actual size of the goods in the width direction.

Features:

1.Reduced Damage
· With two-way hydraulic lock to achieve two-way hydraulic self-lock;
· Clamp arms adopt high-strength steel plate to reduce damage.
2.Fast Handling
· 360° rotation to quickly transition to and from bilge position;
· Worm arm adopts involute gear to improve clamp arm speed.
·Side shift function, easy to operate, and good vision
3. Excellent Durability
· With large modulus slewing bearing to achieve high-strength capacity;
· Highly durable rotator parts to extend service life.

Revolving
Tyre Clamp

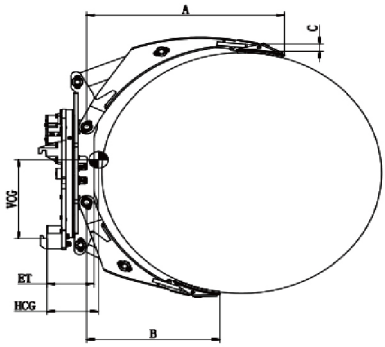

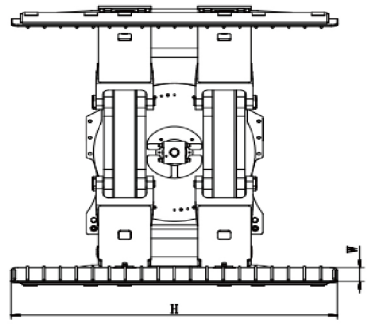

Capacity @ Load Center	Catalog Order NO.	Mounting Class	Roll Range	Long Arm Length	Short Arm Length	Arm Thickness	Weight	Effective Thickness	Vertical Center of Gravity	Horizontal Center of Gravity	Contact Pad Size	Available Forklift
Kg @ mm			(mm)	A(mm)	B(mm)	C(mm)	(kg)	ET (mm)	VCG (mm)	HCG (mm)	W×H(mm)	(t)
1200@650	LT12G-A1	II	410-1300	858	575	45	470	135	330	335	250×1500	1-2.5t
1200@650	LT12G-B1	III	410-1300	858	575	45	472	135	330	340	250×1500	3-4.5t
1200@650	LT12G-A2	II	410-1300	858	575	45	490	135	300	340	250×1600	1-2.5t
2200@700	LT22H-A1-01	II	440-1400	995	670	39	760	236	443	365	250×1600	1-2.5t
2200@700	LT22H-B1	III	440-1400	995	670	39	750	236	443	365	250×1500	3-4.5t
1950@800	LT22H-B4	III	200-1600	1080	750	39	780	236	432	388	250×1500	3-4.5t
2050@750	LT22H-B9-01	III	490-1525	1045	745	39	840	236	426	389	250×1800	3-4.5t

Notes:

1.Forklift trucks need to add 2 sets of oil lines;
2.Please obtain the actual comprehensive bearing capacity from the forklift manufacturer;

Features:

1.Reduced Damage
· With two-way hydraulic lock to achieve two-way hydraulic self-lock;
· Clamp arms adopt high-strength steel plate to reduce damage.
2.Fast Handling
· 360° rotation to quickly transition to and from bilge position;
· Worm arm adopts involute gear to improve clamp arm speed.
3. Excellent Durability
· With large modulus slewing bearing to achieve high-strength capacity;
· Highly durable rotator parts to extend service life.

Block Clamp

8-1 Block Clamp 43

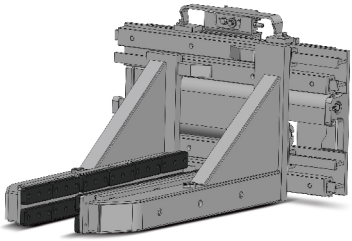

8-2 F-series Block Clamp 44

8-3 Cage Block Clamp 45

Introduction:

Block clamps can efficiently handle and stack nearly any type of soild, regular cubic goods packed without pallets. They are widely used in construction material, metallurgy industries for handling concrete blocks, cement bricks, carton cubes, etc.

Block
Clamp

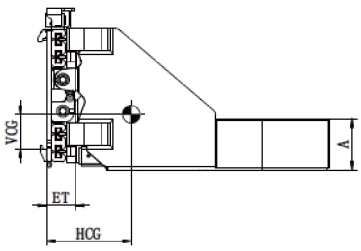

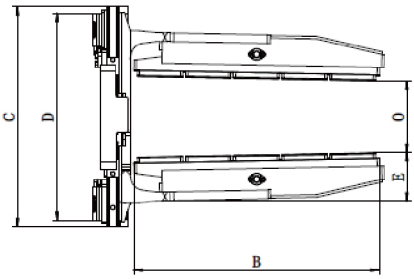

Capacity @ Load Center	Catalog Order NO.	Mounting Class	Opening Range	Arm Height	Arm Length	Frame Width	Hook Spread	Arm Thickness	Weight	Effective Thickness	Vertical Center of Gravity	Horizontal Center of Gravity
Kg @ mm			O(mm)	A(mm)	B(mm)	C(mm)	D(mm)	E(mm)	(kg)	ET (mm)	VCG (mm)	HCG (mm)
2700@500	ZK27G-A1	II	310-1625	234	234	1010	950	202	760	132	171	361
2700@500	ZK27G-B1	III	330-1645	234	234	1010	950	197	870	134	169	455
2700@500	ZK27G-B2	III	310-1625	234	234	1010	950	202	760	134	163	384
2700@500	ZK27G-B3	III	320-1635	124	124	1010	950	195	640	134	174	311
2700@500	ZK27G-B6	III	320-1635	238	238	1010	950	195	830	134	155	441
1800@600	ZK15G-B1	III	350-1630	200	200	1010	980	155	600	131	187	325
2000@500	ZK20G-B1	III	425-1850	190	190	1265	980	200	700	137	172	348

Notes:

1. Please obtain the actual comprehensive bearing capacity of forklift/attachment from the forklift factory.
2. The forklift truck needs to add 2 groups of oil lines.

Features:

1. Imported load keeping valves and cone sealed high-performance rubber hoses.
2. High-performance alloy steel plates for left and right clamping panels.
3. High-strength connection plates have good anti-deformation performance by heat treating.
4. Clamp arms are equipped with replaceable high-wear-resistance rubber blocks.
5. Equipped with sideshifting function inside.

F-Series
Block Clamp

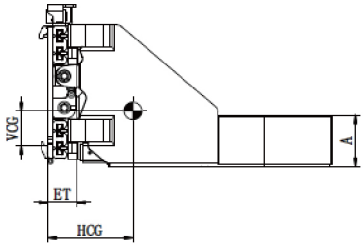

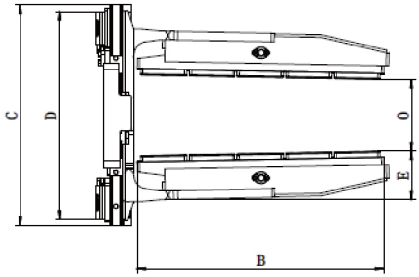

Capacity @ Load Center	Catalog Order NO.	Mounting Class	Opening Range	Arm Height	Arm Length	Frame Width	Hook Spread	Arm Thickness	Weight	Effective Thickness	Vertical Center of Gravity	Horizontal Center of Gravity
Kg @ mm			O(mm)	A(mm)	B(mm)	C(mm)	D(mm)	E(mm)	(kg)	ET (mm)	VCG (mm)	HCG (mm)
1800@600	ZK15F-B1	III	290-1600	160	1230	1100	970	191	680	132	139	339
1800@600	ZK15F-B2	III	270-1580	160	1265	1130	930	191	710	198	180	362

Notes:

1. Please obtain the actual comprehensive bearing capacity of forklift/attachment from the forklift factory.
2. The forklift truck needs to add 2 groups of oil lines.

Features:

1. Imported load keeping valves and cone sealed high-performance rubber hoses.
2. High-performance alloy steel plates for left and right clamping panels.
3. High-strength connection plates have good anti-deformation performance by heat treating.
4. Clamp arms are equipped with replaceable high-wear-resistance rubber blocks.
5. Equipped with sideshifting function inside.

Cage
Block Clamp

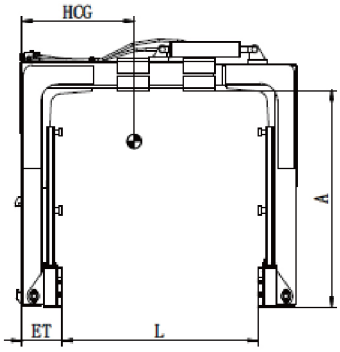

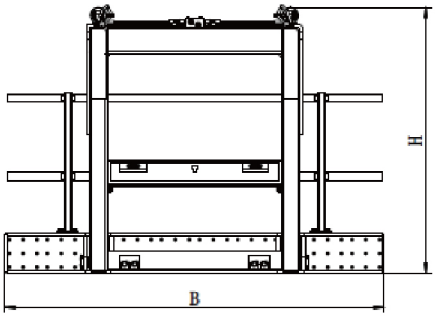

Capacity @ Load Center	Catalog Order NO.	Mounting Class	Opening Range	Arm Height	Overall Height	Slinpt Width	Effective Thickness	Horizontal Center of Gravity	Weight	Available Forklift
Kg @ mm			(mm)	A(mm)	H(mm)	B(mm)	ET (mm)	HCG (mm)	(kg)	(t)
1500@650	ZK15T-B1	III	1100-1400	1250	1550	1250	235	950	800	3-4.5t
1500@650	ZK15T-B2	III	700-1000	1250	1550	1250	235	700	720	3-4.5t
2000@650	ZK20T-B1	III	1100-1400	1250	1550	2170	235	950	950	3-4.5t
2000@650	ZK20T-B2	III	700-1000	1250	1550	2100	235	950	835	3-4.5t

Notes:

1. Please obtain the actual comprehensive bearing capacity of forklift/attachment from the forklift factory.
2. The forklift truck needs to add a group of oil lines.

Features:

1. Overflow valves for hydraulic system can adjust the clamping for different blocks.
2. Hydraulic control check valves for oil cylinder can realise holding pressure.
3. Imported load keeping valves and cone sealed high-performance rubber hoses.
4. Advanced damping technology.
5. Excellent visibility.
6. Especially suitable for carrying and palletizing aerated blocks.

Bale Clamp
Worksheet

Customer information

Host factory/agent _____ Contact _____

Address _____ Post _____

Telephone _____ Fax _____ Email _____

End users _____ Contact _____

Address _____ Post _____

Telephone _____ Fax _____ Email _____

Cargo condition information

Type of goods (cement solid brick, cement hollow brick, coal ash brick, aerated brick, local brick, etc.)

☐ Cement solid brick ☐ Concrete hollow brick ☐ Fly ash brick ☐ Aerated brick
☐ Local brick ☐ Other shaped bricks

Stacking arrangement

(1) Storage stacking method

(2) Stacking method during loading

Brick pressure conditions, etc

(1) The compressive strength of a brick
(2) Brick size consistency
(3) Regularity of bricks
(4) Compressive abrasion of bricks

Single transhipment or stowed cargo information

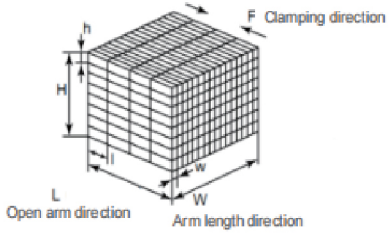

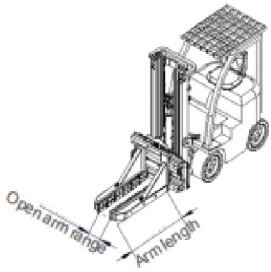

Bale Clamp
Worksheet

Project	Monomer building blocks	Single transhipment or stowage	Unit	Note
Length (l/L)			mm	
width (w/W)			mm	
Height (h/H)			mm	
Weight (g/G)			kg	
Load resistance(f/F)			N	
The stacking layers are M				
Quantity of goods N				
Description of operating conditions				
Other	Whether the package ☐ Yes ☐ No			
	Package direction ☐ W side ☐ L side			
	Whether there are gaps between the bricks ☐ Yes ☐ No			
	Is there cross stacking in adjacent 2 floors ☐ Yes ☐ No			

Note: g is the mass of single brick, and G is the total mass of single transfer or stacking.

Forklift information

Forklift brand	Model	Door frame type	Maximum lift of portal frame	Bearing capacity	Cargo fork size

Cargo fork mounting class/width	Additional number of oil routes	Additional oil pressure	Additional oil flow rate	Remarks (whether twin, etc.)

Multi-purpose Clamp

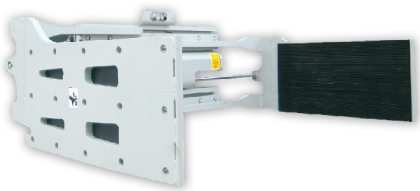

9-1 Multi-purpose Clamp 49

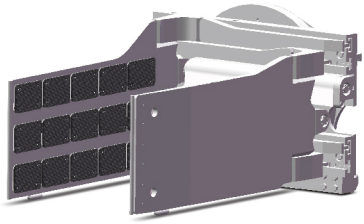

9-2 Revoling Multi-purpose Clamp 50

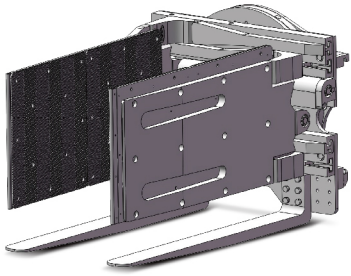

9-3 Fork Revoling Multi-purpose Clamp 51

Introduction:

Multi-Purpose clamps can efficiently and economically handle any types of paper carton, wooden box, carton, metal box and baled products, and reduce the use of pallets.

Multi-purpose
Clamp

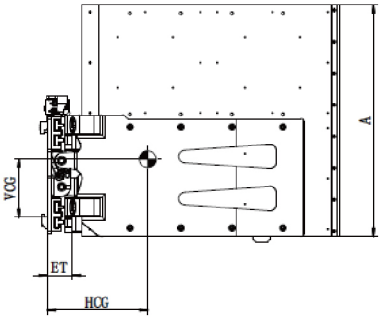

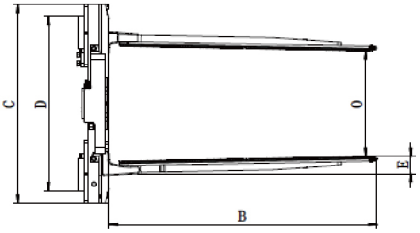

Capacity @ Load Center	Catalog Order No.	Mounting Class	Opening Range	Arm Height	Arm Length	Frame Width	Hook Spread	Arm Thickness	Weight	Effective Thickness	Vertical Center of Gravity	Horizontal Center of Gravity	Available Forklift
Kg @ mm			O(mm)	A(mm)	B(mm)	C(mm)	D(mm)	E(mm)	(kg)	ET (mm)	VCG (mm)	HCG (mm)	(t)
1900@500	GJ18J-A1	II	550-1790	455	1075	1040	825	65	460	117	185	335	1-2.5t
1900@500	GJ18J-A2	II	500-1750	1100	1260	940	825	77	630	117	275	473	1-2.5t
2500@500	GJ27J-B1	III	585-1955	455	1090	1010	970	70	560	132	234	326	3-4.5t
2500@500	GJ27G-B2	III	585-1955	506	1055	1010	970	70	610	132	230	311	3-4.5t

Notes:

1. Please obtain the actual comprehensive bearing capacity of forklift/attachment from the forklift factory.
2. The forklift truck needs to add 2 groups of oil lines.
3. The arm thickness is the needed minimum wedge gap size when clamping, but not the real thickness.

Features:

1. Imported load keeping valves and cone sealed high-performance rubber hoses.
2. High-performance alloy steel plates for left and right clamping panels.
3. With side shift function inside.
4. Clamping rubber plates are easy to replace.
5. Applied to non-pallet carrying and stacking operation.

Revoling
Multi-purpose Clamp

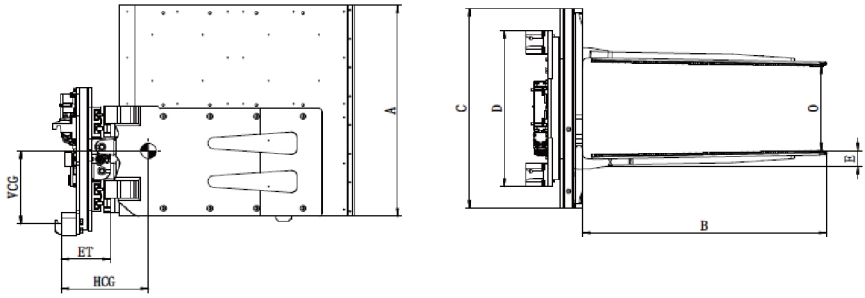

Capacity @ Load Center	Catalog Order NO.	Mounting Class	Opening Range	Arm Height	Arm Length	Frame Width	Hook Spread	Arm Thickness	Weight	Effective Thickness	Vertical Center of Gravity	Horizontal Center of Gravity	Available Forklift
Kg @ mm			O(mm)	A(mm)	B(mm)	C(mm)	D(mm)	E(mm)	(kg)	ET (mm)	VCG (mm)	HCG (mm)	(t)
1900@500	GJ19RT-A1	II	585-1825	455	1075	1040	814	70	750	252	210	315	1-2.5t
1900@500	GJ19RT-B1	III	440-1680	1100	1260	1040	814	77	910	252	363	449	3-4.5t

Notes:

1. Please obtain the actual comprehensive bearing capacity of forklift/attachment from the forklift factory.
2. The forklift truck needs to add 2 groups of oil lines.
3. The arm thickness is the needed minimum wedge gap size when clamping, but not the real thickness.

Features:

1. Two-way hydraulic locks for rotating oil lines ensure safety when working.
2. High-performance alloy steel plates for left and right clamping panels.
3. 360 degrees of rotation.
4. Clamping rubber plates are easy to replace.
5. Rotating oil hinge has the self-locking function.

Fork Revoling
Multi-purpose Clamp

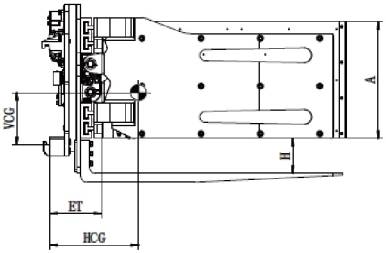

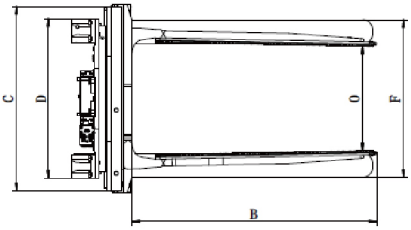

Capacity @ Load Center	Catalog Order NO.	Mounting Class	Opening Range	Fork Distance	Arm Height	Arm Length	Frame Width	Hook Spread	Fork Dimensions	Arm fork Spacing	Weight	Effective Thickness	Vertical Center of Gravity	Horizontal Center of Gravity	Available Forklift
Kg @ mm			O(mm)	F(mm)	A(mm)	B(mm)	C(mm)	D(mm)	(mm)	(mm)	(kg)	ET (mm)	VCG (mm)	HCG (mm)	(t)
1600@600	GJ16RT-A2	II	540-1770	762	600	1235	940	814	45X100X1280	155	960	264	264	441	1-2.5t
1600@600	GJ16RT-B2	III	540-1770	674/804/934	600	1235	940	814	45X122X1280	177	990	260	265	442	3-4.5t
1600@600	GJ16RT-B3	III	550-1780	500/630	450	1220	940	814	45X122X1280	50	930	260	239	420	3-4.5t
1600@600	GJ16RT-B4	III	580-1810	660/790	450	1220	940	814	45X122X1280	50	880	260	238	388	3-4.5t

Notes:

1. Please obtain the actual comprehensive bearing capacity of forklift/attachment from the forklift factory.
2. The forklift truck needs to add 2 groups of oil lines.
3. The arm thickness is the needed minimum wedge gap size when clamping, but not the real thickness.

Features:

1. Two-way hydraulic locks for rotating oil lines ensure safety when working.
2. High-performance alloy steel plates for left and right clamping panels.
3. 360 degrees of rotation.
4. Clamping rubber plates are easy to replace.
5. Rotating oil hinge has the self-locking function.

Fork Clamp

10-1 Fork Clamp 53

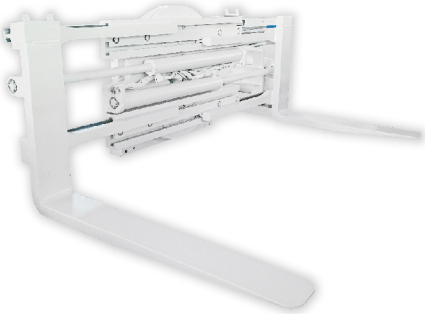

10-2 Rotating Fork Clamp 54

Introduction:

Fork Clamps are generally used in handling palletised goods as well as for clamping purpose, such as wooden crates, bales and tires. The operator can switch it freely between fork and clamp as required.

Fork
Clamp

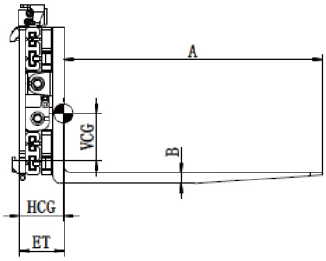

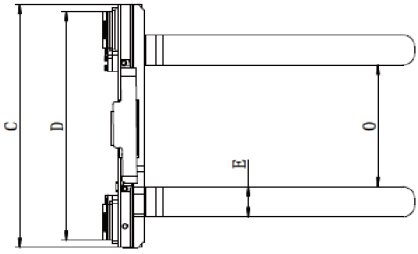

Capacity @ Load Center	Catalog Order NO.	Mounting Class	Opening Range	Fork Length	Fork Widt	Fork Thickness	Frame Width	Hook Spread	Weight	Effective Thickness	Vertical Center of Gravity	Horizontal Center of Gravity	Available Forklift
Kg @ mm			O(mm)	A(mm)	E(mm)	B(mm)	C(mm)	D(mm)	(kg)	ET (mm)	VCG (mm)	HCG (mm)	(t)
1600@600	CJ16G-A1	II	400-1625	1070	100	35	1040	825	320	167	155	170	1-2.5t
1600@600	CJ16G-A2	II	400-1625	1200	100	35	1040	825	330	167	161	170	1-2.5t
2300@600	CJ23G-B1	III	510-1820	1070	125	45	1010	950	440	186	214	163	3-4.5t
2300@600	CJ23G-B3	III	510-1820	1520	125	45	1010	950	470	186	181	243	3-4.5t
2300@600	CJ23G-B5	III	510-1820	1200	125	45	1010	950	450	186	191	198	3-4.5t
2300@600	CJ23G-B5-02	III	510-1820	1300	125	45	1010	950	460	186	188	211	3-4.5t
4000@600	CJ40G-C1	IV	480-2030	1670	150	60	1300	1015	1000	236	475	265	5-7t

Notes:

1. Please obtain the actual comprehensive bearing capacity of forklift/attachment from the forklift factory.
2. The forklift truck needs to add 2 groups of oil lines.

Features:

1. Imported load keeping valves and cone sealed high-performance rubber hoses.
2. Clamp arms adopt alloy steel castings for high-strength.
3. Equipped with sideshifting function inside.
4. Guide rail assembly for good anti-bending performance.

Rotating
Fork Clamp

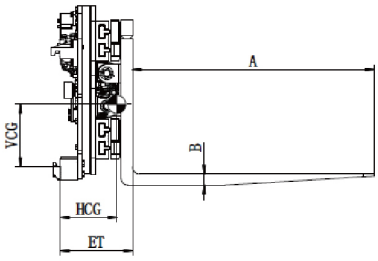

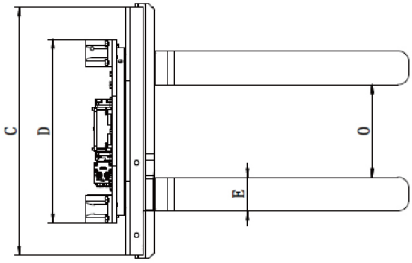

Capacity @ Load Center	Catalog Order NO.	Mounting Class	Opening Range	Fork Length	Fork Widt	Fork Thickness	Frame Width	Hook Spread	Weight	Effective Thickness	Vertical Center of Gravity	Horizontal Center of Gravity	Available Forklift
Kg @ mm			O(mm)	A(mm)	E(mm)	B(mm)	C(mm)	D(mm)	(kg)	ET (mm)	VCG (mm)	HCG (mm)	(t)
2300@600	CJ23R-A1	II	460-1830	1370	125	50	1100	814	720	318	266	277	2-2.5t
2300@600	CJ23R-B2	III	410-1805	1070	150	50	1100	814	710	318	266	235	3-4.5t
2300@600	CJ23R-B3	III	515-1880	1200	125	45	1100	814	690	318	264	233	3-4.5t
2300@600	CJ23R-B4	III	410-1780	1520	150	50	1100	814	780	318	252	323	3-4.5t
2300@600	CJ23R-B6	III	460-1830	1370	125	50	1100	814	700	318	170	279	3-4.5t
2300@600	CJ23R-B9	III	460-1830	1220	125	50	1100	814	710	318	263	249	3-4.5t
2300@600	CJ23R-B11	III	410-1780	1820	150	50	1100	814	875	318	245	366	3-4.5t
3200@600	CJ32R-B1	III	480-2030	1520	150	60	1300	922	1280	383	280	314	4.5t
3200@600	CJ32G-C1	IV	480-2030	1520	150	60	1300	980	1310	396	286	323	5-7t
3200@600	CJ32G-C2	IV	480-2030	1220	150	60	1300	980	1260	396	276	283	5-7t

Notes:

1. Please obtain the actual comprehensive bearing capacity of forklift/attachment from the forklift factory.
2. The forklift truck needs to add 2 groups of oil lines.

Features:

1. Imported oil cylinder seals and high-performance rubber hoses ensure reliability and safety.
2. All the structual parts adopt alloy steel plates.
3. 360 degrees of rotation.
4. Excellent visibility.

Drum Clamp

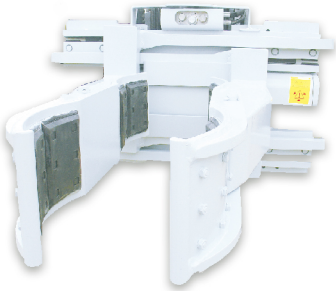

11-1 Sideshifing Drum Clamp 57

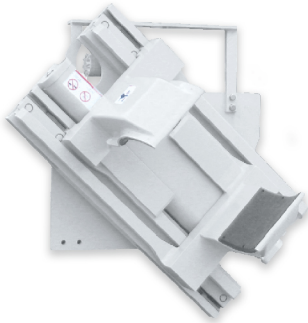

11-2 Revolving Drum Clamp 58

Introduction:

Drum clamps can handle one, two or four drums during transportation, ensure the safe and reliable clamping and improve the handling efficiency. They are widely used in barrelled cargo stacking operations, such as oil, petrochemical and food industry

11-3 Olecranon Drum Clamp 59

Introduction:

Olecranon drum clamp is a simple attachment for handling standard iron drums. It can efficiently stack and handle the standard iron drums.

Sideshifing
Drum Clamp

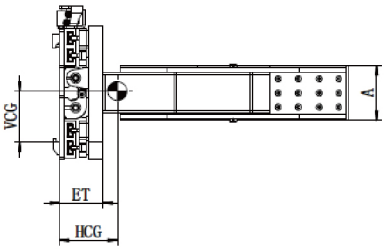

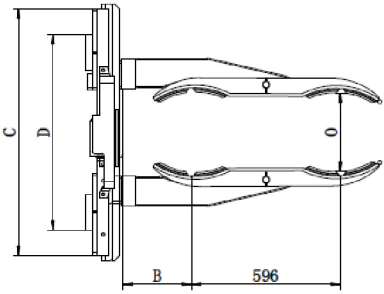

Capacity @ Load Center	Catalog Order NO.	Mounting Class	Opening Range	Arm Height	Arm Length	Frame Width	Hook Spread	Weight	Effective Thickness	Vertical Center of Gravity	Horizontal Center of Gravity	Available Forklift
Kg @ mm			O(mm)	A(mm)	E(mm)	C(mm)	D(mm)	(kg)	ET (mm)	VCG (mm)	HCG (mm)	(t)
1400@500	TJ14S-A1	II	320-1450	230	300	1040	825	410	183	215	243	2-2.5t
1000@500	TJ10S-A1	II	400-1400	235	494	1040	825	350	138	215	144	1-2.5t
1900@500	TJ19S-A1	II	520-1740	235	325	1040	825	458	143	215	233	2-2.5t
1400@500	TJ14S-B1	III	320-1540	230	300	1040	1000	420	188	265	256	3-4.5t
1900@500	TJ19S-B1	III	520-1740	235	325	1040	1000	340	188	267	107	3-4.5t

Notes:

1. Please obtain the actual comprehensive bearing capacity of forklift/attachment from the forklift factory.
2. The forklift truck needs to add 2 groups of oil lines.
3. The cover picture shows the four-barrel clamp.

Features:

1. Imported load keeping valves and cone sealed high-performance rubber hoses.
2. High-performance alloy steel plates for left and right clamping panels.
3. Inside of clamping arms are covered with replaceable anti-skid rubber strips.
4. With side shift function inside.
5. Excellent visibility.

Revoling
Drum Clamp

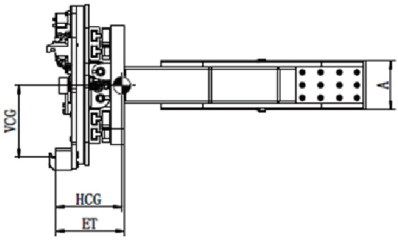

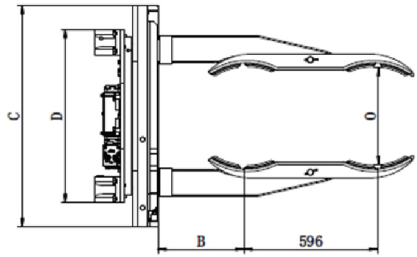

Capacity @ Load Center	Catalog Order NO.	Mounting Class	Opening Range	Arm Height	Arm Length	Frame Width	Hook Spread	Weight	Effective Thickness	Vertical Center of Gravity	Horizontal Center of Gravity	Available Forklift
Kg @ mm			O(mm)	A(mm)	E(mm)	C(mm)	D(mm)	(kg)	ET (mm)	VCG (mm)	HCG (mm)	(t)
1600@600	TJ19R-A1	II	470-1700	800	320	1040	814	800	275	325	380	1-2.5t
1900@310	TJ19R-A2	II	520-1750	235	337	1040	815	450	194	258	140	1-2.5t
1600@600	TJ19R-A3	II	470-1700	230	300	1040	814	670	275	324	279	1-2.5t
1600@600	TJ19R-B1	III	470-1700	800	320	1040	814	810	275	334	380	3-4.5t
1900@310	TJ19R-B2	III	520-1750	235	337	1040	610	470	226	325	142	3-4.5t
1600@600	TJ19R-B3	III	470-1700	230	300	1040	814	640	275	332	279	3-4.5t

Notes:

1. Please obtain the actual comprehensive bearing capacity of forklift/attachment from the forklift factory.
2. The forklift truck needs to add 2 groups of oil lines.
3. The cover picture shows the two-barrel clamp.

Features:

1. Imported load keeping valves and cone sealed high-performance rubber hoses.
2. High-performance alloy steel plates for left and right clamping panels.
3. Inside of clamping arms are covered with replaceable anti-skid rubber strips.
4. 360 degrees of rotation.
5. Excellent visibility.

Olecranon
Drum Clamp

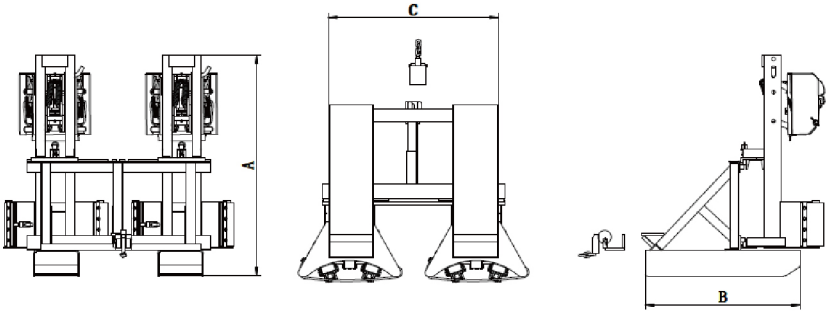

Capacity @ Load Center	Catalog Order NO.	Overall Length	Overall Height	Weight	Frame Width	Available Forklift
Kg @ mm		B(mm)	A(mm)	(kg)	C(mm)	(t)
500@1500	YT05G-A1	710	952	82	745	1-7t
900@1500	YT09G-A1	1080	960	115	840	1-7t
2000@1500	YT20G-B1	1080	980	165	840	1-7t

Notes:

1. Please obtain the actual comprehensive bearing capacity of forklift/attachment from the forklift factory.
2. It can be directly covered on the forks with convenient installation.
3. The actual load center spacing is large, and the effective load may be only about half of the actual load.

Hinged Fork

12-1 Economical Hinged Fork 61

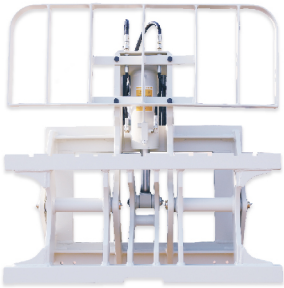

12-2 Single-Cylinder Hinged Fork 62

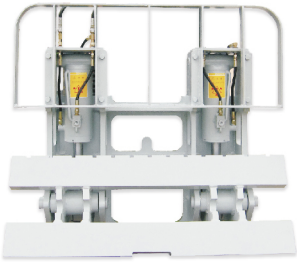

12-3 Double-Cylinder Hinged Fork 63

Introduction:

LDSJ Hinged Fork can increase the fork carriage leaning and stoping angle with tilt up 25°, tilt down 45°. It's widely used in recycling, fertilizer,sediment, plastic grain and so on. With LDSJ Hinged Fork, you can greatly improve the flexibility and efficiency.

Economical
Hinged Fork

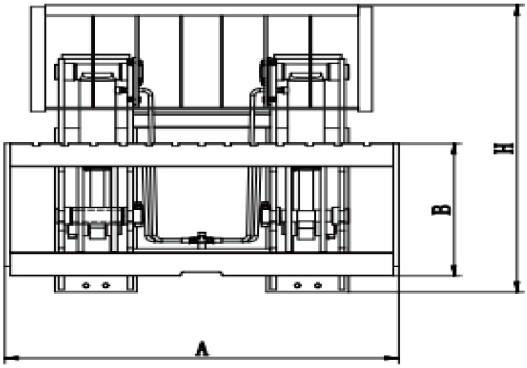

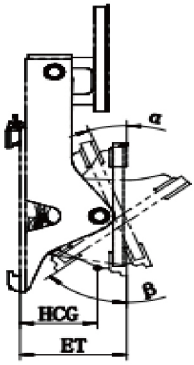

Capacity @ Load Center	Catalog Order NO.	Mounting Class	The goods fork class	Cylinder number	Carringe Width	Carringe Height	Overall Height	Tift Forward/ Tift Backward	Effective Thickness	Horizontal Center of Gravity	Weight	Available Forklift
Kg @ mm					A(mm)	B(mm)			ET (mm)	HCG (mm)	(kg)	(t)
3000@500	QF30J-B1	III	III	Double	1100	506	1190	45°/20°	335	153	310	3-4.5t
2000@500	QF20F-A3-01	II	II	Double	1100	407	1123	45°/20°	335	165	251	1-2.5t
3000@500	QF30F-B6	III	III	Double	1132	506	1110	45°/20°	340	155	305	3-4.5t

Notes:

1.Forklift trucks need to add 1 sets of oil lines;
2.Please obtain the actual comprehensive bearing capacity from the forklift manufacturer;
3.Tilting cylinder does not have self-locking function;
4.Various types of tipping buckets can be equipped according to user needs.

Features:

· Highly durable seals and hydraulic parts to provide superior service life;
· The fork frame adopts high-performance alloy steel plate with high strength;
· 45° forward tilt and 20° backward tilt to dump goods well.

Single-Cylinder
Hinged Fork

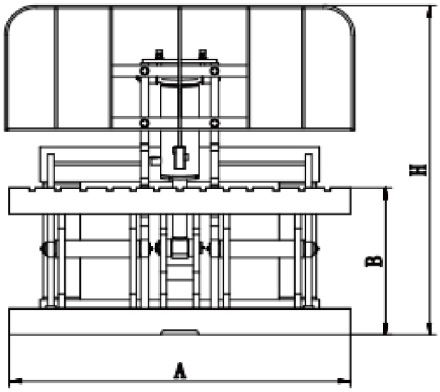

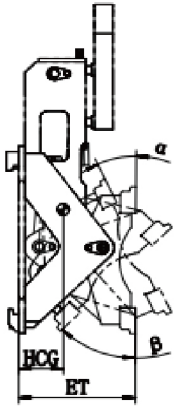

Capacity @ Load Center	Catalog Order NO.	Mounting Class	The goods fork class	Cylinder number	Carringe Width	Carringe Height	Overall Height	Tift Forward/ Tift Backward	Effective Thickness	Horizontal Center of Gravity	Weight	Available Forklift
Kg @ mm					A(mm)	B(mm)			ET (mm)	HCG (mm)	(kg)	(t)
2000@500	QF20F-A1	II	III	Single	1100	506	1132	45°/25°	375	165	315	1-2.5t
2000@500	QF20F-A2	II	II	Single	1040	407	1132	45°/25°	375	165	295	1-2.5t
3000@500	QF30F-B1	III	III	Single	1100	506	1132	45°/25°	375	165	305	3-4.5t

Notes:

1.Forklift trucks need to add 1 sets of oil lines,Oil cylinder with self-locking function;
2.Please obtain the actual comprehensive bearing capacity from the forklift manufacturer;
3.Various types of tipping buckets can be equipped according to user needs.

Features:

· Highly durable seals and hydraulic parts to provide superior service life;
· The fork frame adopts high-performance alloy steel plate with high strength;
· 45° forward tilt and 20° backward tilt to dump goods well.

Double-Cylinder
Hinged Fork

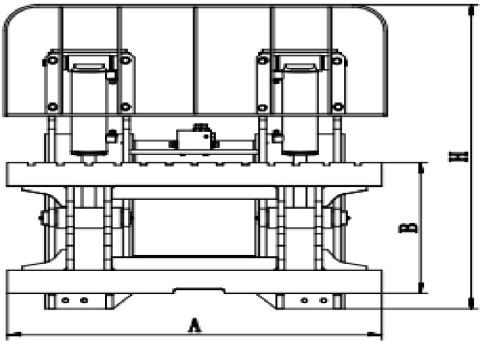

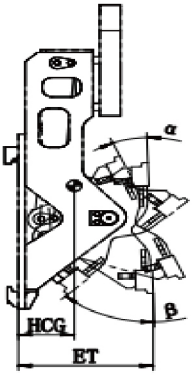

Capacity @ Load Center	Catalog Order NO.	Mounting Class	The goods fork class	Cylinder number	Carringe Width	Carringe Height	Overall Height	Tift Forward/ Tift Backward	Effective Thickness	Horizontal Center of Gravity	Weight	Available Forklift
Kg @ mm					A(mm)	B(mm)			ET (mm)	HCG (mm)	(kg)	(t)
3500@500	QF35F-B1-02	III	III	Double	1100	506	1172	45°/25°	392	165	360	3-4.5t
4500@600	QF45F-B1-01	III	III	Double	1800	506	1172	45°/25°	392	193	680	3-4.5t
4500@600	QF45F-B2-01	III	III	Double	1126	506	1172	45°/25°	392	132	510	3-4.5t
4500@600	QF45F-B3-01	III	III	Double	1500	506	1172	45°/25°	392	190	670	3-4.5t
5000@600	QF50F-C1-01	IV	III	Double	1800	506	1172	45°/25°	392	193	690	5-7t
5000@600	QF50F-C2-01	IV	IV	Double	1785	634	1210	45°/25°	427	210	785	5-7t

Notes:

1.Forklift trucks need to add 1 sets of oil lines,Standard self-locking valve;
2.Please obtain the actual comprehensive bearing capacity from the forklift manufacturer;
3.Various types of tipping buckets can be equipped according to user needs.

Features:

· Highly durable seals and hydraulic parts to provide superior service life;
· The fork frame adopts high-performance alloy steel plate with high strength;
· 45° forward tilt and 20° backward tilt to dump goods well.

Push Pull

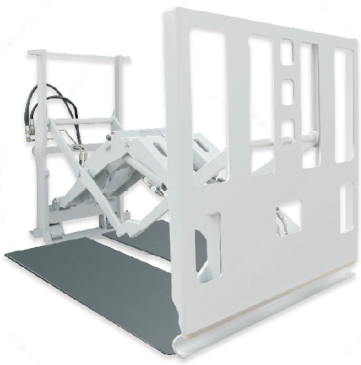

13-1 Quick-installed Push Pull 65

13-2 Integral fork plate Push Pull 66

Introduction:

Push/pulls are designed for palletless packet goods handling operations.These push/pulls are rugged, heavy duty attachmens for high cycle slipsheet applications, requiring high productivity with low maintenance. LDSJ dedicated push/pulls are the best performing and durable push/pulls acailable.

Quick-installed
Push Pull

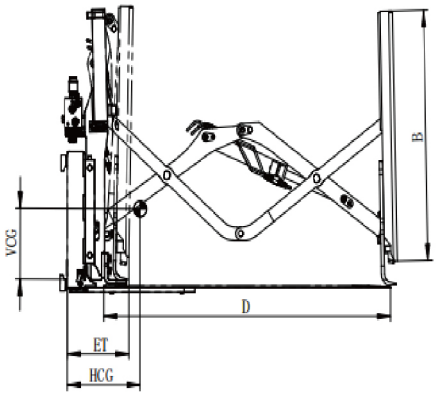

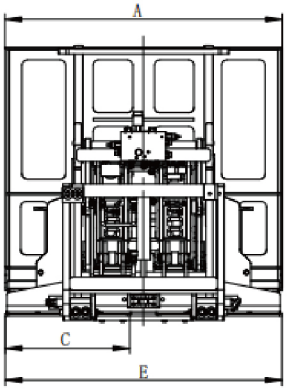

Capacity @ Load Center	Catalog Order NO.	Mounting Class	Push Range	Baffle Height×Width	Platen Height×Width	Outside platen spacing	Effective Thickness	Vertical Center of Gravity	Horizontal Center of Gravity	Weight	Available Forklift
Kg @ mm			F (mm)	B×A(mm)	D×C(mm)	E (mm)	ET (mm)	VCG (mm)	HCG (mm)	(kg)	(t)
Skateboard can not stay											
1600@500	TL16L-A1	II	1230	920×1014	1235×455	1012	190	300	270	360	1-2.5t
2000@500	TL20L-B1	III	1230	920×1014	1235×455	1012	215	315	295	410	3-4.5t
Skateboard can stay											
1600@500	TL16L-A2	II	1230	920×1014	1320×455	1012	275	280	296	435	1-2.5t
1600@500	TL16L-A4	II	1350	975x1014	1445x455	1012	285	290	320	500	1-2.5t
2000@500	TL20L-B2	III	1230	920×1014	1330×455	1012	295	285	300	495	3-4.5t
2000@500	TL20L-B4	III	1230	920×1014	1330×1012	1012	295	285	300	505	3-4.5t
2000@500	TL20L-B6	III	1230	1120×1400	1330×650	1400	295	295	320	495	3-4.5t
2000@500	TL20L-B8	III	1230	1050x1300	1330×598	1298	295	310	315	500	3-4.5t
2000@650	TL20L-B10	III	1350	1120x1500	1450x699	1500	300	300	350	650	3-4.5t
2500@700	TL25L-B1	III	1400	1120×1400	1500×700	1500	305	320	330	780	3-4.5t

Notes:

1.Forklift trucks need to add 1 sets of oil lines;
2.Please obtain the actual comprehensive bearing capacity from the forklift manufacturer;
3.Quick-installed Push/pulls push-pull device with standard fork need to be purchased separately.

Features:

· Fork plate and connecting plate adopt high-strength plate to extend service life;
· High visibility pantograph, gripper jaw and faceplate;
· Simplified hydraulic circuit and highly durable hydraulic part;
. Two sets of cylinders are controlled by overflow valve and with a good view.

Integral fork plate
Push Pull

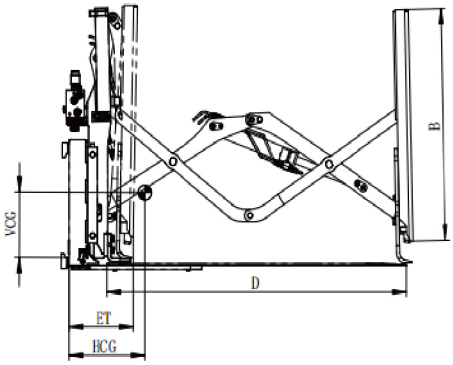

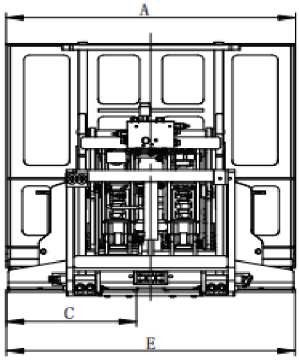

Capacity @ Load Center	Catalog Order NO.	Mounting Class	Push Range	Baffle Height×Width	Minimum Turck Carriage Width		Effective Thickness	Horizontal Center of Gravity	Weight	Available Forklift
Kg @ mm			C (mm)	B×A(mm)	E (mm)	A (mm)	ET (mm)	HCG (mm)	(kg)	(t)
1600@500	TL16B-A4	II	1230	986×1014	940	1160	305	296	615	1-2.5t
1600@500	TL16B-B2	III	1350	1050×1014	900	1250	305	360	670	3-4.5t
1600@500	TL16B-B4	III	1230	1200×1200	950	1170	305	300	750	3-4.5t

Notes:

1.Forklift trucks need to add 2 sets of oil lines;
2.Please obtain the actual comprehensive bearing capacity from the forklift manufacturer;

Features:

· Fork plate and connecting plate adopt high-strength plate to extend service life;
· High visibility pantograph, gripper jaw and faceplate;
· Simplified hydraulic circuit and highly durable hydraulic part;
. Two sets of cylinders are controlled by overflow valve and with a good view;
. More convenience with the integral fork plate.

Single Double Pallets Handler

14 Single Double Pallets Handler 69

Introduction:

Single Double Pallets Handlers flexible application of single or double pallets handling. They are widely used for handling and stacking operations in food and beverage industry, import and export trade and bottled goods industry.

Single Double
Pallets Handler

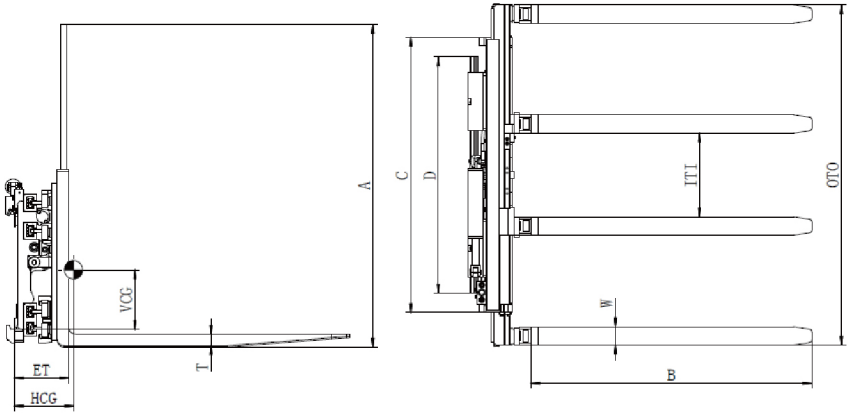

Capacity @ Load Center	Catalog Order No.	Mounting Class	Fork Width	Opening Range ITI	Opening Range OTO	Fork Size	Arm Height	Hanging Plate Width	Effective Thickness	Vertical Center of Gravity	Horizontal Center of Gravity	Weight	Available Forklift
Kg @ mm			C(mm)	ITI(mm)	OTO(mm)	BxWxT(mm)	A(mm)	D(mm)	ET (mm)	VCG (mm)	HCG (mm)	(kg)	(t)
2800@600	DS28G-A1	II	1100	371-729	705-2100	1065x80x50	1260	970	246	257	224	550	1-2.5t
2800@600	DS28G-B1	III	1105	371-729	705-2100	1065x80x50	1260	1030	236	257	224	550	3-4.5t
2800@600	DS28G-B2	III	1105	371-729	705-2100	1220x80x50	1260	1030	236	249	264	570	3-4.5t
2800@600	DS28G-B6	III	1175	301-659	635-2030	1220x80x50	1260	1030	236	252	250	570	3-4.5t
4000@600	DS40G-C1	IV	1175	301-657	635-2030	1200x80x60	129	1292	291	354	260	810	5-7t

Notes:

1. Please obtain the actual comprehensive bearing capacity of forklift/attachment from the forklift factory.
2. The forklift truck needs to add 2 groups of oil lines.

Features:

1. Imported load keeping valves and cone sealed high-performance rubber hoses.
2. High-performance alloy steel plates for the guide rail assembly.
3. With side shift function inside.
4. Two pairs of forks can handle two pallets at one time while being separated, and can operate flexibly while being closed.

Single Double Pallet Handler
Worksheet

Customer information

Host factory/agent _____ Contact _____

Address _____ Post _____

Telephone _____ Fax _____ Email _____

End users _____ Contact _____

Address _____ Post _____

Telephone _____ Fax _____ Email _____

Tray type

Solid wood pallet

Slatted wooden tray

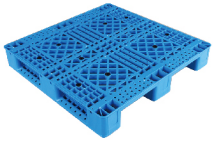

Plastic tray

Description of other types of pallets and special usage requirements (photos of pallets are required) _____

_____

_____

Pallet dimensions and pallet fork key dimensions

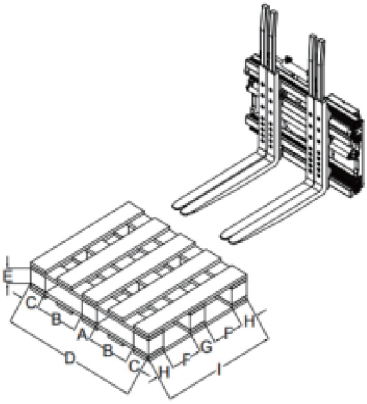

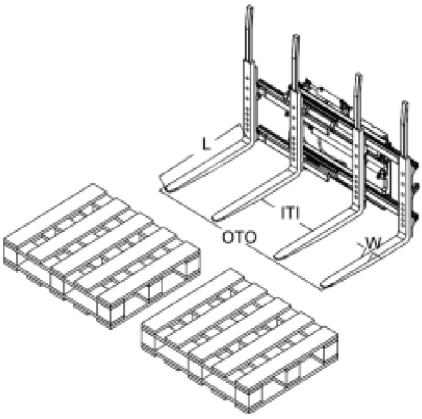

Dimensions: (Unit,mm)

A _____ B _____ C _____ D _____ E _____ F _____ G _____

H _____ I _____ Inside cargo fork range (ITI) _____ Cargo fork width (W) _____

Outer Fork Range (OTO) _____ Cargo fork length (L) _____

Single Double Pallet Handler
Worksheet

Pallet fork handling status

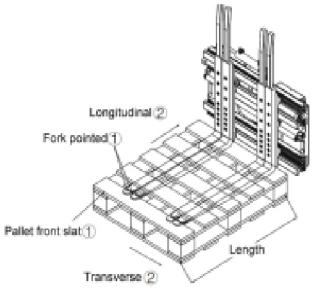

① Can the fork reach the lath at the end of the pallet

Can ☐ Can't ☐

② Does the fork go in from all sides of the tray

Can ☐ Can't ☐

If there are four forks

Frequency of pallet longitudinal fork operation (%)

Frequency of pallet crosswalk operation (%)

Note:Vertical refers to the direction along the length of the fork or the length of the tray,while horizontal refers to the direction across the length of the tray (see the diagram).

Pallet concern

Do you need to close and separate two pallets for fork goods

Yes ☐ No ☐

If you have

Tray spacing: when two trays are closed, the inner spacing L1= _____

Tray spacing: when two trays are open, the inner spacing L2= _____

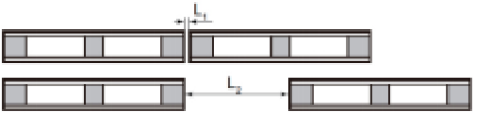

Forklift information

Forklift brand	Model	Door frame type	Maximum lift of portal frame	Bearing capacity	Cargo fork size

Cargo fork mounting class/width	Additional number of oil routes	Additional oil pressure	Additional oil flow rate	Remarks (whether twin, etc.)

Turnaload

15 Turnaload 73

Introduction:

Equipped with gripper rotation and handling function for loading, unloading and sorting of box and soft bale cargo, LDSJ Turnloads provide you with more efficiency and stability.

Turnaload

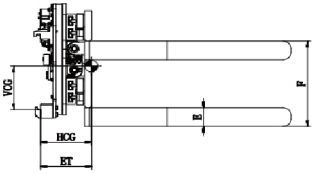

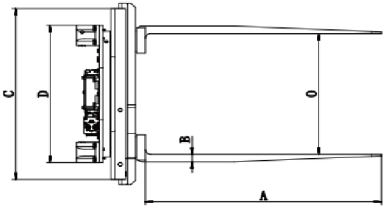

Capacity @ Load Center	Catalog Order NO.	Mounting Class	Opening Range	Tine Size	Tine Spacing	Effective Thickness	Vertical Center of Gravity	Horizontal Center of Gravity	Weight	Available Forklift
Kg @ mm			A(mm)	(mm)	B(mm)	ET (mm)	VCG(mm)	HCG (mm)	(kg)	(t)
1000@685	XC10G-A1	II	390-1390	45x150x1370	800	313	328	386	875	2-2.5t
1500@610	XC15G-B1	III	1020-2330	45x125x1220	940	307	335	288	875	3-4.5t
2300@610	XC23G-B1	III	710-2020	45x125x1220	575	313	295	297	825	3-4.5t

Notes:

1.Forklift trucks need to add 2 sets of oil lines;
2.Please obtain the actual comprehensive bearing capacity from the forklift manufacturer.

Features:

1. Highly durable gear drive box and ring gear to provide superior service life;
2.With large modulus slewing bearing to achieve high-strength capacity;
3.With 360° rotation, to offer you more efficiency for loading and unloading.

Sponge Rubber Clip

16 Sponge Rubber Clip 75

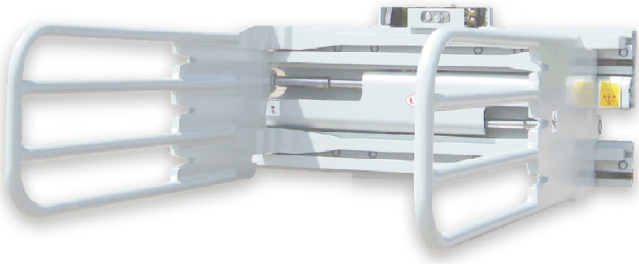

Introduction:

Sponge rubber clip can efficiently and safely handle and stack any type of foam products in rubber and chemical industry.

Sponge
Rubber Clip

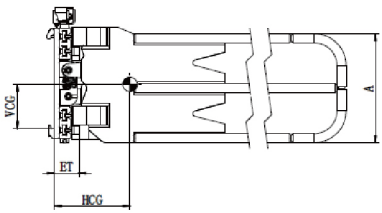

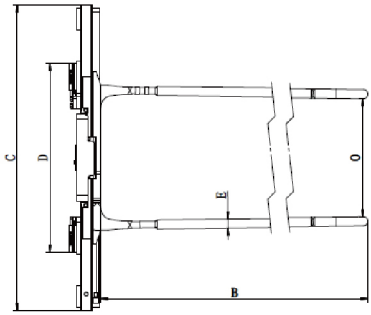

Capacity @ Load Center	Catalog Order NO.	Mounting Class	Opening Range	Arm Height	Arm Length	Frame Width	Hook Spread	Bar Arm Diameter	Weight	Effective Thickness	Vertical Center Of Gravity	Horizontal Center Of Gravity
Kg @ mm			O(mm)	A(mm)	B(mm)	C (mm)	D(mm)	E(mm)	(kg)	ET (mm)	VCG (mm)	HCG (mm)
500@1000	HX05G-B1	III	1270-3120	600	1825	1680	1040	Φ50	760	134	244	429
1000@1000	HX10G-B1	III	730-2580	600	2825	1680	1040	Φ50	880	134	242	619
1000@500	HX10G-B2	III	885-2310	600	1500	1100	970	Φ50	670	134	248	400
1500@500	HX15G-B1	III	740-2590	600	2525	1680	1040	Φ50	860	134	240	546
1500@500	HX15G-B2	III	650-2500	600	1825	1680	1040	Φ50	770	134	243	413
1500@500	HX15G-B3	III	650-2500	600	2000	1680	1040	Φ50	790	134	242	450
1500@500	HX15G-B7	III	640-2490	600	2300	1680	1040	Φ50	810	134	241	516

Notes:

1. Please obtain the actual comprehensive bearing capacity of forklift/attachment from the forklift factory.
2. The forklift truck needs to add 2 groups of oil lines.

Features:

1. Imported load keeping valves and cone sealed high-performance rubber hoses.
2. High-performance alloy steel plates for the guide rail assembly.
3. With side shift function inside.

Material Sender

17 Material Sender 77

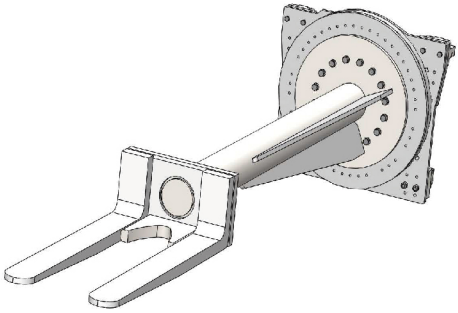

Introduction:

LDSJ Material senders widely used in the smelting industry. And it can realize smelting feeding operation safely and efficiently.

Material
Sender

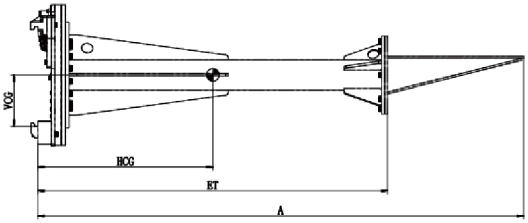

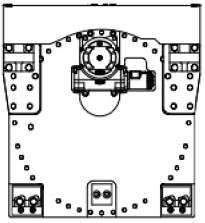

Capacity @ Load Center	Catalog Order NO.	Mounting Class	Overall Width	Weight	Effective Thickness	Vertical Center Of Gravity	Horizontal Center Of Gravity	Shovel Pyte	Available Forklift
Kg @ mm			(mm)	(kg)	ET (mm)	VCG (mm)	HCG (mm)		(t)
1000@3470	SL10G-C1	IV	986	1120	3240	319	1310	Flat shovel	5-7t
1000@3000	SL10G-C3	IV	986	1100	2635	296	1025	Fork	5-7t
1000@2780	SL10G-C4	IV	986	1100	2465	305	1046	Fork	5-7t
1000@2780	SL10G-C5	IV	986	1000	2870	316	975	Fork	5-7t
1500@2780	SL15G-C1	IV	986	1020	2310	334	1020	Wedge	5-7t
1500@2900	SL15G-C3	IV	986	1120	2390	305	1300	Fork	5-7t
1500@3000	SL15G-C4	IV	986	1050	2380	338	1250	Wedge	5-7t

Notes:

1.Forklift trucks need to add 1 sets of oil lines;
2.Please obtain the actual comprehensive bearing capacity from the forklift manufacturer;

Features:

1.Highly durable gear drive box and ring gear to provide superior service life;
2.With large modulus slewing bearing to achieve high-strength capacity;
3.With 360° rotation, to offer you more efficiency for loading and unloading.

Bag Push

18 Bag Push 79

Introduction:

Pushers are designed for palletless packet goods handling operations.These pushers are rugged, heavy duty attachmens for high cycle slipsheet applications, requiring high productivity with low maintenance. LDSJ dedicated pushers are the best performing and durable pushers acailable.

Bag
Push

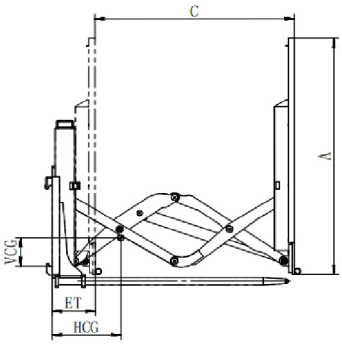

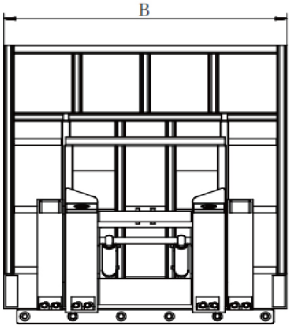

Capacity @ Load Center	Catalog Order NO.	Mounting Class	Push Range	Fork Length	Baffle Height ×Width	Tine Amount @Tine Spacing	Effective Thickness	Vertical Center of Gravity	Horizontal Center of Gravity	Weight	Available Forklift
Kg @ mm			C(mm)	(mm)	AxB(mm)		ET (mm)	VCG (mm)	HCG(mm)	(kg)	(t)
2000@500	TL20C-B16	III	1200	1165	1500×1400	6@238	255	280	238	640	3-4.5t
2000@500	TL20C-B59-01	III	1000	1000	2200×1600	8@210	255	330	220	720	3-4.5t
2500@500	TL20C-B63	III	1200	1165	1800×1400	8@215	255	275	240	700	3-4.5t
2500@500	TL25C-B9-01	III	1200	1220	1400×1600	8@210	255	240	290	740	3-4.5t
2000@500	TL20C-B64-01	III	1300	1300	1600×1500	8@185	255	290	295	770	3-4.5t
2000@500	TL20C-B81	III	1300	1290	1200×1100	5@215	255	260	275	700	3-4.5t
2000@500	TL20C-B6-02	III	1400	1400	1300×1500	8@195	255	205	360	840	3-4.5t
2000@500	TL20C-B54-04	III	1400	1400	1300×1500	9@170	255	245	335	800	3-4.5t
2000@750	TL20C-B36-02	III	1480	1500	1600×1800	9@233	255	250	305	870	3-4.5t
2000@750	TL20C-B49	III	1480	1500	1800×1500	9@181	255	210	435	930	3-4.5t

Notes:

1.Forklift trucks need to add 1 sets of oil lines;
2.Please obtain the actual comprehensive bearing capacity from the forklift manufacturer;
3.This fork adopts round rod fork.

Features:

1.Fork plate and connecting plate adopt high-strength plate to extend service life;
2.High visibility pantograph, gripper jaw and faceplate;
3.Simplified hydraulic circuit and highly durable hydraulic part;
4.Two sets of cylinders are controlled by overflow valve and with a good view.

Inverta Push

19 Inverta Push 81

Introduction:

LDSJ's Inverta Push widely used in nearly every operation that ships out loads of bags or cartons,such as grain, cement, sugar, canned goods, boxed goods and so on. It has great ability to clamp, rotate and push your product.

Inverta
Push

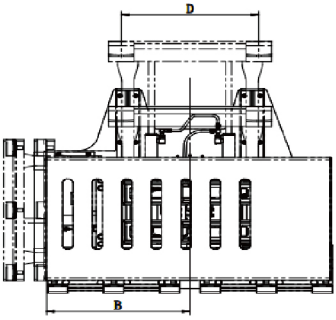

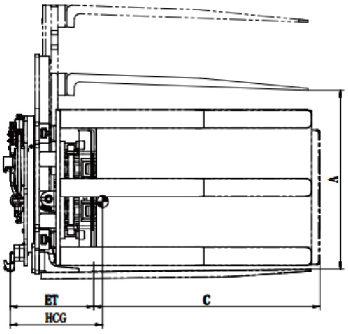

Capacity @ Load Center	Catalog Order NO.	Mounting Class	Clamping Range	Adjustment Range	Push Range	Tine Spacing	Effective Thickness	Horizontal Center of Gravity	Weight	Available Forklift
Kg @ mm			A(mm)	B(mm)	C(mm)	D (mm)	ET(mm)	HCG (mm)	(kg)	(t)
1500@600	XT15G-B1	III	900-1500	550-700	1270	505、635、785、895	460	510	1295	3-4.5t
1500@600	XT15G-B2	III	1150-1950	550-700	1270	505、635、785、895	460	510	1475	3-4.5t

Notes:

1.The fork spacing D can be adjusted.
2.Please obtain the actual comprehensive bearing capacity from the forklift manufacturer;
3.Forklift trucks need to add 1 sets of oil lines.

Features:

1.Highly durable gear drive box and ring gear to provide superior service life;
2.With large modulus slewing bearing to achieve high-strength capacity;
3.With 360° rotation and push/pill, clamping/opening function to offer you more efficiency for loading and unloading.

Load Stabilizer

20 Load Stabilizer 83

Introduction:

Designed for transporting unstable loads such as drinks, malted beverages and empty containers, Load Stabilizers allow faster operation speeds and more efficient handling procedures by securing the palletized load. LDSJ Load Stabilizers offer the secure way to handle unstable palletized loads.

Load
Stabilizer

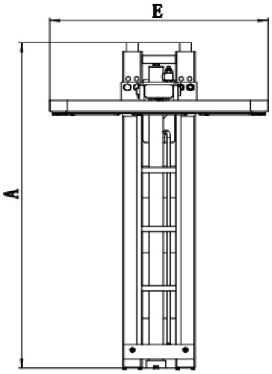

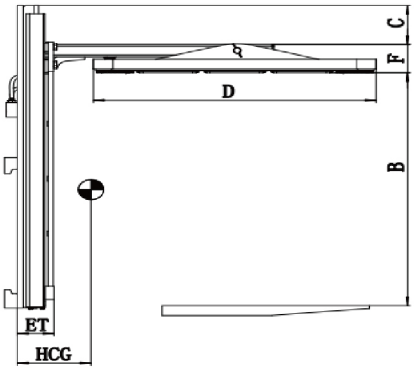

Capacity @ Load Center	Catalog Order NO.	Mounting Class	Moving Range	Overall Height	Height	Contact Pad Height	Contact Pad Packing Force	Contact Pad Length	Contact Pad Width	Effective Thickness	Horizontal Center Of Gravity	Weight	Available Forklift
Kg @ mm			B(mm)	A(mm)	C(mm)	F (mm)	(ber)	D(mm)	E(mm)	ET (mm)	HCG (mm)	(kg)	(t)
2000@500	WD20J-A1	II	955-1965	1240	170	116	100-160	1100	1100	126	340	275	1-2.5t
2000@500	WD20J-A2	II	1485-2495	1770	170	116	100-160	1100	1100	126	320	310	1-2.5t
2000@500	WD20J-A3	II	1085-2095	1290	170	116	100-160	910	910	126	290	250	1-2.5t
3000@500	WD30J-A1	II	955-1965	1240	170	116	100-160	910	780	126	275	240	1-2.5t
3000@500	WD30J-A2	II	955-1965	1240	170	116	100-160	910	910	126	290	250	1-2.5t
3000@500	WD30J-B1	III	955-1965	1240	170	116	100-160	910	780	126	275	240	3-4.5t
3000@500	WD30J-B2	III	955-1965	1240	170	116	100-160	1100	1100	126	340	275	3-4.5t
3000@500	WD30J-B3	III	955-1965	1240	170	116	100-160	1000	1000	126	315	260	3-4.5t

Notes:

1.Please obtain the actual comprehensive bearing capacity from the forklift manufacturer;
2.Forklift trucks need to add 1 sets of oil lines.

Features:

1.Excellent driver visibility.
2.Narrow frame width.
3.Frame fits between forks.
4.Thin arm pad profile.
5.Highly competitive rating specifications.
6.Internal relief valve.
7.Carriage compatibility.

Carpet Boom

21 Carpet Boom 85

Introduction:

Carpet Boom is heavy duty attachments designed for handling the steel rolls. LDSJ Carpet Boom is a sample handling tool, but can effectively carry the belt hole paper rolls and steel rolls.

Carpet
Boom

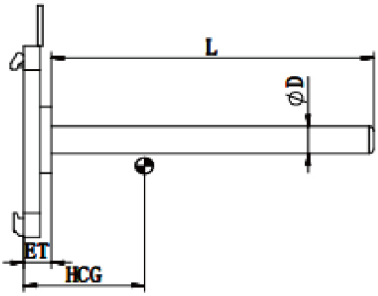

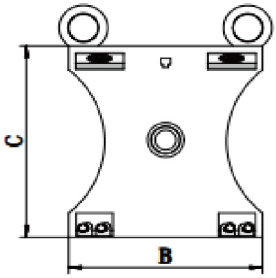

Capacity @ Load Center	Catalog Order NO.	Mounting Class	Rod Diameter	Bar Arm Length	Weight	Effective Thickness	Vertical Center of Gravity	Horizontal Center Of Gravity	Overall Width Overall Height
Kg @ mm			D(mm)	L(mm)	(kg)	ET (mm)	VCG(mm)	HCG (mm)	B\C (mm)
1000@500	CG10G-A1	II	60	1070	105	40	193	142	500/530
1000@500	CG10G-A4	II	65	1070	110	40	192	156	500/530
1000@500	CG10G-A8	II	70	1070	115	40	192	170	500/530
1000@500	CG10G-A13	II	75	2000	155	80	200	488	440/525
1000@700	CG10G-B1	III	85	1070	275	50	283	125	500/635
1000@700	CG10G-B6	III	100	1070	295	50	281	155	500/635
1500@500	CG15G-B1	III	70	1100	160	80	212	148	493/636
2000@700	CG20G-B3	III	70	1450	180	80	204	222	493/636
1500@500	CG30G-B1	III	70	1000	155	80	215	129	493/636
4500@500	CG45G-C1	IV	140	1100	400	95	326	225	680/785

Notes:

1.Please obtain the actual comprehensive bearing capacity from the forklift manufacturer.

Features:

1.Smooth surface to prevent damage to the load;
2.Quick-release for easy attachment;
3.Profiled bar end for easy entry into center of loads;
4.Patented lock-pin assembly ensures stability.

Sanitation Fork

22 Sanitation Fork 87

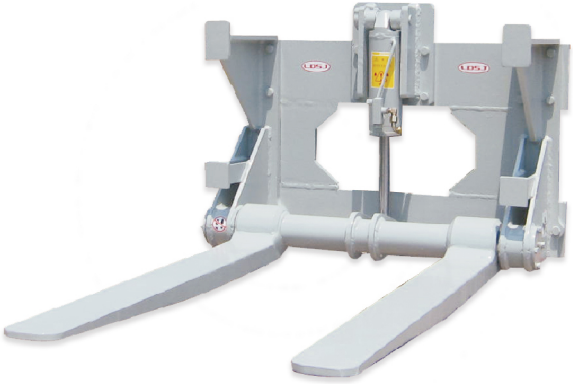

Introduction:

Mainly used in the environmental protection industry, LDSJ Sanitation Fork can realize the rapid dumping of specific dustbins.

Sanitation
Fork

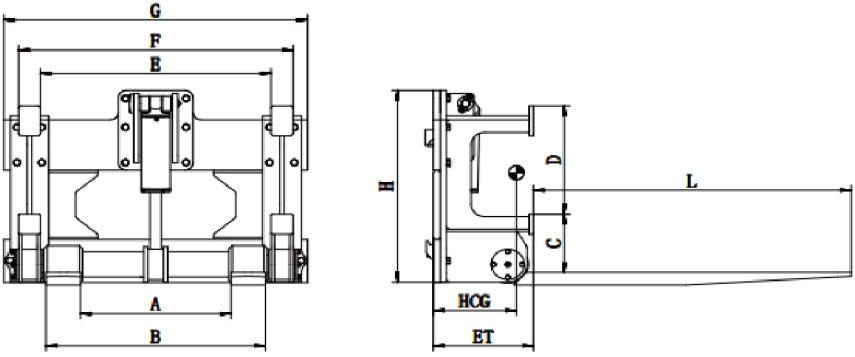

Capacity @ Load Center	Catalog Order NO.	Mounting Class	Effective Thickness	Fork Thickness	Tilt Forward	Fork Thickness	Fork Length	Fork Spacing	Fork Width	Horizontal Center Of Gravity	Weight	Available Forklift
Kg @ mm			ET (mm)	A\B(mm)	α(°)	E\F (mm)	L\T(mm)	C\D(mm)	G\H(mm)	HCG (mm)	(kg)	(t)
3000@600	HW30G-B1	III	363	545/795	73°	835/995	1150/50	230/430	1100/762	312	420	3-4.5t
3000@600	HW30G-B2	III	363	545/795	73°	835/995	1150/50	230/478	1100/762	312	420	3-4.5t
3000@600	HW30G-B3	III	363	545/795	73°	680/840	1150/50	330/430	1100/762	312	420	3-4.5t
3000@600	HW30J-B1	III	466	545/795	73°	835/995	1220/50	230/430	1100/779	370	420	3-4.5t
3500@700	HW35J-B1	III	450	545/795	73°	835/995	1350/50	230/430	1100/779	380	495	3-4.5t

Notes:

1.Please obtain the actual comprehensive bearing capacity from the forklift manufacturer;
2.Forklift trucks need to add 1 sets of oil lines.

Features:

1. Highly durable seals and hydraulic parts to provide superior service life;
2.The fork frame adopts high-performance alloy steel plate with high strength;
3.73° forward tilt to dump goods well.

PVC Clamp

23 PVC Clamp 89

Introduction:

PVC Clamp can efficiently handle and stack PVC pipe under normal temperature without pallet. Widely used in PVC industry. The functions of tipping and withhold can greatly improve the flexibility of the forklift and handling efficiency.

PVC
Clamp

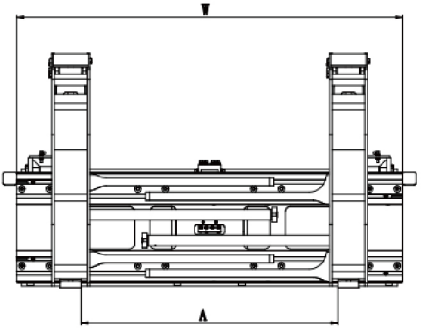

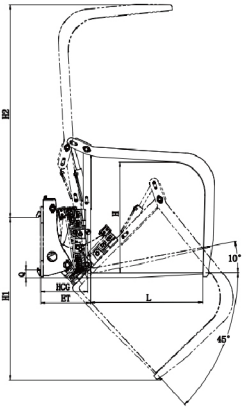

Capacity @ Load Center	Catalog Order NO.	Mounting Class	Opening Range	Effective Fork Length	Pedestal Width	Platen longitudinal spacing	Updip Height	Downdip Height	Q	Effective Thickness	Horizontal Center Of Gravity	Weight	Available Forklift
Kg @ mm			A(mm)	L(mm)	w(mm)	H (mm)	H2(mm)	H1 (mm)	(mm)	ET(mm)	HCG(mm)	(kg)	(t)
2000@500	QY20G-B2	III	1530-3550	1120	2240	1045	2015	1535	75	505	425	1420	3-4.5t
2000@500	QY20G-B3	III	1300-3800	1250	2520	1170	2040	1640	75	510	520	1500	3-4.5t
2000@500	QY20G-C1	IV	2440-5550	1100	2640	1160	1970	1720	130	510	520	2220	5-7t

Notes:

1.Please obtain the actual comprehensive bearing capacity from the forklift manufacturer;
2.Forklift trucks need to add 2 sets of oil lines.

Features:

1.Highly durable seals and hydraulic parts to provide superior service life;
2.The structural part adopts high-performance alloy steel plate with high strength;
3.Holding various PVC pipe to reduce logistics cost and improve efficiency.

Hinged Steel Pipe Clamp

24 Hinged Steel Pipe Clamp 91

Introduction:

Hinged Steel Pipe Clamp can efficiently handle and stack cylindrical objects under normal temperature without pallet. Widely used in construction, logistics industries for handling the steel pipe and so on. The functions of tipping and withholding can greatly improve the flexibility of the forklift and handling efficiency.

Hinged Steel
Pipe Clamp

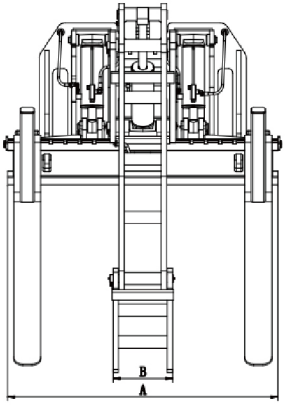

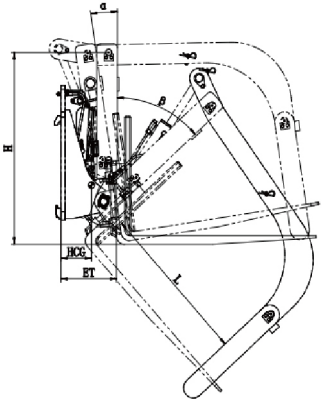

Capacity @ Load Center	Catalog Order NO.	Mounting Class	Hinged Fork Mounting Class	Carriage Width	Raker Width	Raker Pivot Height	Minimum Clip Distance	Effective Thickness	Horizontal Center Of Gravity	Tilt Forward Tilt Backward	Weight	Available Forklift
Kg @ mm				A(mm)	RW(mm)	RH (mm)	L(mm)	ET(mm)	HCG (mm)		(kg)	(t)
3000@500	QY30G-B1	III	Non-standard fork	1500	345	1100	970	345	350	50°/10°	870	3-4.5t
5000@600	QY50G-C4	IV	Non-standard fork	1785	275	1170	970	385	350	45°/10°	960	5-7t
2500@600	QY25G-B6	III	Non-standard fork	1380	345	1100	970	335	430	50°/10°	700	3-4.5t
2500@500	QY25G-B7	III	standard fork	1380	310	1090	980	380	430	50°/10°	545	3-4.5t
5000@500	QY50G-C6	IV	Non-standard fork	1785	390	871	819	470	450	50°/10°	1040	5-7t

Notes:

1.Please obtain the actual comprehensive bearing capacity from the forklift manufacturer;
2.Forklift trucks need to add 2 sets of oil lines and all cyclinders are self-locking.

Features:

1.Highly durable seals and hydraulic parts to provide superior service life;
2.The fork frame adopts high-performance alloy steel plate with high strength;
3.45° forward tilt and 19° backward to hold round wood easy and well.

Hinged Broke Handler

25 Hinged Broke Handler 93

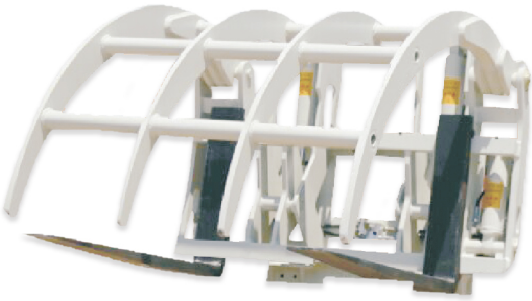

Introduction:

Hinged Broke Handler is able to enlarge the ipward and downward tilt angle of fork carriage (Upward 20°-25°, Downward 45°) and the arms will hold the goods to avoid damage in transit. Widely used in recycling and waste management, it can greatly improve the flexibility of loading and unloading of the forklift.

Hinged
Broke Handler

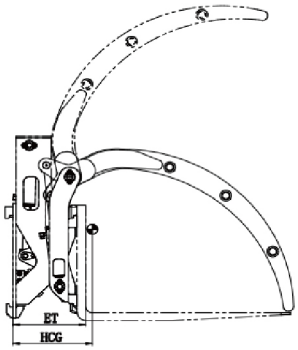

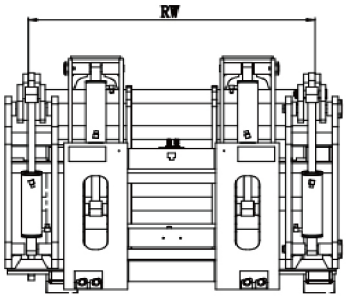

Capacity @ Load Center	Catalog Order NO.	Mounting Class	Available Fork Length	Tilt Angleforks (Up/Down)	Raker Width	Raker Pivot Height	Effective Thickness	Vertical Center Of Gravity	Horizontal Center Of Gravity	Weight	Available Forklift
Kg @ mm			(mm)		RW(mm)	(mm)	ET(mm)	VCG (mm)	HCG (mm)	(kg)	(t)
2000@500	FC20Q-B2	III	1070	20°/45°	1170	760	375	365	395	580	3-4.5t
2000@500	FC20Q-B2-01	III	1220	20°/45°	1170	805	375	365	405	590	3-4.5t
2000@500	FC20Q-B3	III	1370	25°/45°	1170	809	335	365	510	610	3-4.5t

Notes:

1.Please obtain the actual comprehensive bearing capacity from the forklift manufacturer;
2.Forklift trucks need to add 2 sets of oil lines and all cyclinders are self-locking.

Features:

1.Highly durable seals and hydraulic parts to provide superior service life;
2.The structural part adopts high-performance alloy steel plate with high strength;
3.45° forward tilt and 10° backward to hold waste paper easy and well.

Lifting Arm

26 Lifting Arm 95

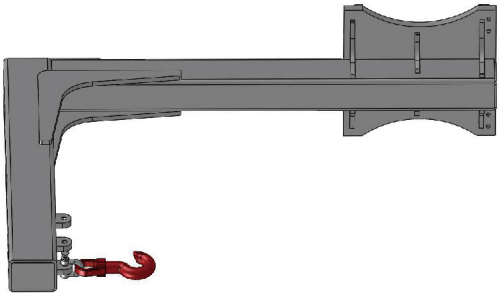

Introduction:

Lifting Arm is heavy duty attachments designed for lifting goods. LDSJ Lifting Arm is a sample lifting tool, but can effectively carry goods.

Lifting
Arm

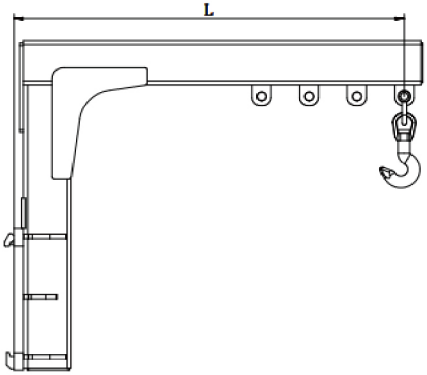

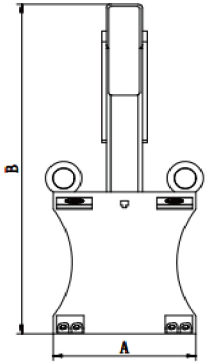

Capacity @ Load Center	Catalog Order NO.	Mounting Class	Crane Jib Type	Hook Number	Hoisting Positiong	Overall Width	Overall Height	Weight	Available Forklift
Kg					(mm)	A (mm)	B (mm)	(kg)	(t)
1000	QZ10G-X1	Fork type	Single boom	1	1800、2000、2200、2400、2600、2800	485	485	250	1-7t
2500	QZ25G-B2	III	Single boom	1	1300、1600、2000、2300、2600	800	800	300	3-4.5t
1500	QZ15G-B1	III	Single boom	1	1130	600	600	250	3-4.5t
3000	QZ30G-B5	III	Single boom	1	1050、1550	600	600	365	3-4.5t
2000	QZ20G-B6	III	Double boom	4	400、1400	1080	1080	365	3-4.5t
4000	QZ40G-C1	IV	Single boom	2	830、1630	600	600	375	5-7t
3000	QZ30G-C2	IV	Double boom	2	1030、1880	1600	1600	880	5-7t

Features:

High-strength steel plate to provide superior service life and High security.

Bar Arm Clamp

27 Bar Arm Clamp 97

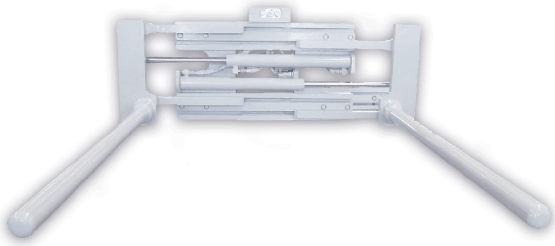

Introduction:

Bar Arm Clamp is a kind of flat holding device that can be opened, clamped and moved sideways. Its round bar can effectively fit cylindrical goods and realize fast transportation.

Bar
Arm Clamp

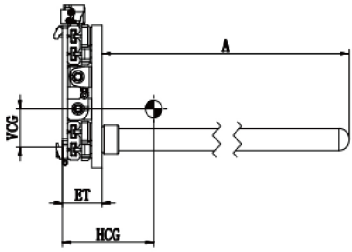

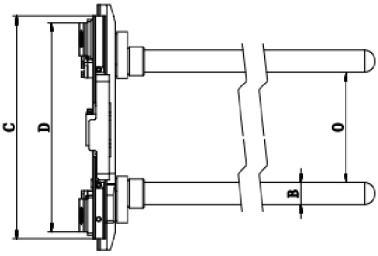

Capacity @ Load Center	Catalog Order No.	Mounting Class	Opening Range	Frame Width	Bar Arm Diameter	Bar Arm Length	Vertical Center Of Gravity	Horizontal Center Of Gravity	Effective Thickness	Weight	Available Forklift
Kg @ mm			(mm)	A(mm)	C(mm)	L (mm)	VCG(mm)	HCG (mm)	ET(mm)	(kg)	(t)
1600@600	YG16G-A1	II	246-1400	1040	Φ75	1500	218	241	165	400	1-2.5t
2300@600	YG23G-B1	III	240-1400	1010	Φ75	1065	213	239	179	460	3-4.5t

Notes:

1.Please obtain the actual comprehensive bearing capacity from the forklift manufacturer;
2.Forklift trucks need to add 2 sets of oil lines.

Features:

1.Highly durable seals and hydraulic parts to provide superior service life;
2.With clamping/opening/sideshifting functions and good view to improve efficiency.

Load Extender

28 Load Extender 99

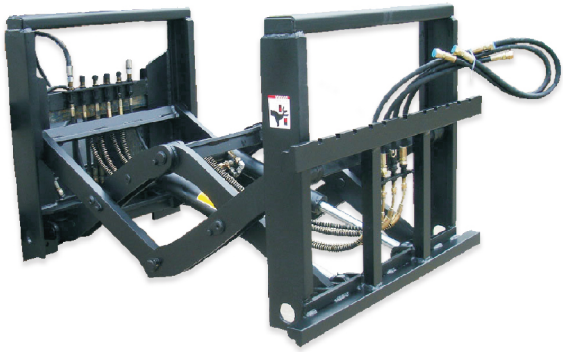

Introduction:

Load Extender is an useful application when loading and unloading the trucks or railcars from one side only. On the front of the load extender a range of attachments can be fitted, like fork positioners and roll clamps, making the load extender a flexible tool.

Load
Extender

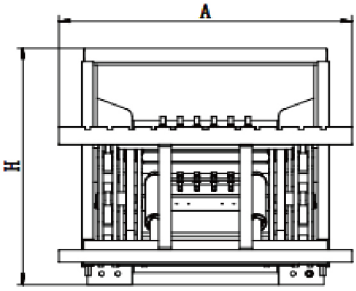

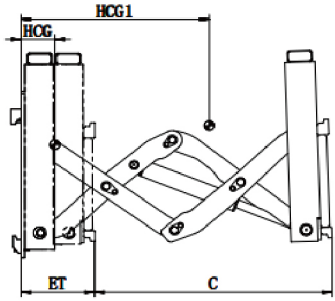

Capacity @ Load Center	Catalog Order NO.	Mounting Class	Push Range	Overall Height	Carruage Width	Effective Thickness	Horizontal Center Of Gravity		Weight	Available Forklift
Kg @ mm			C(mm)	H(mm)	A(mm)	ET (mm)	HCG(mm)	HCG1(mm)	(kg)	(t)
2000@600	QJ20G-B1	III	1000	875	1038	302	140	595	385	3-4.5t

Notes:

1.Please obtain the actual comprehensive bearing capacity from the forklift manufacturer;
2.Forklift trucks need to add 1 sets of oil lines and all cyclinders are self-locking.
3.Add forks according to user needs, please pay attention to the carrying capacity of the forks;
4.If you need to match other attachments before the forward fork, please contact us.

Features:

Extended reach allows the operator to work from one side which reduces working time and increases productivity.

Practical Application Effect

CJ16G-A1

ZK10Q-B1

GJ18J-A1

GJ18J-A2

GC70

GC30

TL20C-B1

SC30D-B1

XC15G-B1

YM45G-B1

RJ30RT-B1

ZK27G-B1

YT09G-A1

ZJ27R-B4

YX18G-A5

RJ25ST-B4

FC20Q-B2

XZ10X-A1

RJ30ST-C1

LT12G-A1

Practical Application Effect

FC30G-B1

CJ40G-C1

QF30F-B1

QF35F-B1

ZX07J-A1

RJ20ST-B1

RJ25ST-B2

SL15G-C2

TJ14S-A1

TJ19G-A1

TJ19R-A2

TJ14S-B1

TY25G-A2

JC30Q-B1

YX18G-A9

HX05G-B1

YX18G-A6

QF30F-B1

RJ22ST-B1

ZB40G-C1

TECHLIFT
INTERNATIONAL

1 833 TECHLIFT - info@techlift.ca